NTPC LTD

2 X 660 MW MOUDA SUPER THERMAL POWER PROJECT, STAGE II (TG PACKAGE)

PROJECT SPECIFIC TECHNICAL SPECIFICATION FOR TG HALL 200/20 T (DOUBLE GIRDER) EOT CRANES IN TANDEM OPERATION

SPECIFICATION NO.: PE-TS-387-501-A001

BHARAT HEAVY ELECTRICALS LTD
POWER SECTOR PROJECT ENGINEERIING MANAGEMENT
NOIDA
INDIA

INDEX

S.N.	VOLUME	SECTION	DESCRIPTION	PAGES
1.0	Volume II B	Section-A	Scope of Enquiry	2
2.0	Volume II B	Section-B	Project Information	5
3.0	Volume II B	Section-C	Specific Technical Requirement	12
4.0	Volume II B	Section-C	Operation and Maintenance Service	2
5.0	Volume II B	Section-C	Procedure No. PEM (Q) / 01 – Gear Box Qualifying Criteria	5
6.0	Volume II B	Section-C	Typical Stator Lifting Arrangement Drawing (for reference)	1
7.0	Volume II B	Section-C	Annexure-I, Makes of sub vendor's items	2
8.0	Volume II B	Section-C	Annexure-II, Mandatory spares parts for EOT Crane	2
9.0	Volume II B	Section-C	Annexure-III, Procedure for load /overload testing of TG hall EOT crane at Manufacture's works.	2
10.0	Volume II B	Section-C	Load Testing procedure of Lifting Beam at Manufacturer's Works including lifting beam MQP	4
11.0	Volume II B	Section-C	Annexure-IV A, Painting Procedure	1
12.0	Volume II B	Section-C	Annexure-IV B, Color Coding Procedure	1
13.0	Volume II B	Section-C	Annexure-V, Drawing and documents including submission schedule and title block	4
14.0	Volume II B	Section-C	Manufacturing Quality Plan – EOT Crane	9
15.0	Volume II B	Section-D	Technical Specification for VVVF Control drive	5
16.0	Volume II B	Section-D	Technical Specification for EOT Crane	23
17.0	Volume II B	Section-D	Data sheet –A / B: EOT Crane (with VVVF drives) including crane clearance diagram PE-DG-387-501-A001 Rev 03A	16
18.0	Volume III	Section-D	Schedule of deviation –Document to be submitted along with the offer.	1
19.0	Volume III	Section-D	Schedule of Performance	1
20.0	Volume III	Section-D	Schedule of Dispatch	1
21.0	Volume III	Section-D	Schedule of Weights and Dimensions	1
			Technical specification (Electrical portion)	
22.0	Volume II B	Section-C	Electrical scope between BHEL and vendor	1

23.0	Volume II B	Section-C	Equipment and services to be provided by bidder	1
24.0	Volume II B	Section-D	General technical requirement for LV motors	5
25.0	Volume II B	Section-D	General technical Requirements of PVC Power and control cables.	5
26.0	Volume II B	Section-D	General technical Requirements for cabling installation.	5
27.0	Volume II B	Section-D	Quality Plan for AC motors above 50kW (LV)	2
28.0	Volume II B	Section-D	Quality Plan for PVC Power and control cables.	5
29.0	Volume II B	Section-D	Quality Plan for cable trays and accessories.	2
30.0	Volume II B	Section-D	Load data format (Electrical)	1
31.0	Volume II B	Section-D	Data sheet-A – LV motors	1
32.0	Volume II B	Section-D	Data sheet-A – Cables	5
33.0	Volume II B	Section-D	Data sheet-A – Cable trays and accessories.	2
34.0	Volume II B	Section-D	Data sheet-C– LV motors	12
35.0	Volume II B	Section-D	Data sheet-C– cables	2
36.0	Volume II B	Section –D	Special Technical requirements – Electrical	27
37.0			Documents to be submitted along with offer Annexure VI including compliance cum confirmation certificate.	3

Note:

1.0 Bidder to note that BHEL reserves the right for drawing/document submission through web based Document Management System. Bidder would be provided access to the DMS for drawing/document approval and adequate training for the same. Detailed methodology would be finalized during the kick-off meeting. Bidder to ensure following at their end.

- Internet explorer version – Minimum Internet Explorer 7.
- Internet speed – 2 mbps (Minimum preferred).
- Pop ups from our external DMS IP (124.124.36.198) should not be blocked.
- Vendor's Internal proxy setting should not block DMS application's link (http://124.124.36.198/wrenchwebaccess/login.aspx).

A.0 SCOPE OF ENQUIRY

1.0 This specification includes, but not limited to design, engineering, material selection, manufacturing and assembly, inspection, testing at manufacturer's works, packing, forwarding and transportation to site, unloading, storage & handling at Site, erection, commissioning and final load test at site of two (2) nos double girder EOT Cranes with operator's cabin and necessary accessories including supply of mandatory spares, operation and maintenance of cranes for 24 crane months.

2.0 Supplies and services shall be rendered in conformity with proven design principles, taking into account the current technology. The requirements of the contract must be fulfilled in its entirety.

3.0 It is not the intent to specify completely herein all the details of design and construction equipment. However, all the equipment shall conform in all respect to high standard of engineering, design, workmanship and shall be capable of performing in continuous commercial operation up to the vendors / subcontractor's guarantees in a manner acceptable to the purchaser / engineer who will interpret the meaning of drawing and specifications and shall be entitled to reject any work or material which in his judgement is not in full accordance herewith.

4.0 The supplies and services shall be rendered inclusive of all appliances and interconnecting arrangements with other supplies, necessary for installation of all accessories, needed for proper and reliable continuous operation and for satisfactory maintenance and repair.

5.0 In case of any data / requirement stipulated in the drawings but not in the specification and vice-versa, such data / requirement shall be deemed to be contained in both. Contradictions between drawings and specifications, if any, shall be brought to the attention of the Purchaser / Consultant by the Bidder and the correct requirement shall be obtained.

6.0 In the event of any conflict between the various sections of the specification, the more stringent of the two as per the interpretation of the purchaser shall be applicable..

7.0 All necessary co-ordination with regard to sub-contracted equipment shall be carried out by the vendor. The Purchaser will communicate only with the vendor for all matters pertaining to this contract.

8.0 The general terms and conditions, instructions to bidder and other attachments referred to elsewhere are made a part of the tender specification. The equipment materials and works covered by this specification is subject to all the attachments referred in the specification. The bidder shall be responsible of and governed by all the requirements stipulated herein.

9.0 The standard quality plan is included in this specification to enable the bidder to understand the extent of inspection and testing requirements to execute this job. The successful bidder has to follow the quality plan.

PROJECT INFORMATION

1.0 BACKGROUND

Mouda STTP Stage-I comprising of two units of 500 MW each is presently under implementation. Now in view the huge power generation capacity requirement and future capacity addition plans, it is proposed to enhanced capacity of Mouda STTP. The Present proposal is to install additional two units of 660 MW in Stage-II this making the ultimate capacity of the project to 2320 MW.

2.0 LOCATION AND APPROACH

The plant site is located in Mouda Tehsil, district Nagpur of Maharashtra Stage, having latitude and longitude of 20°10'50" N and 79°23'52" E respectively. The site is bounded by villages Kumbhari on North, Lapka & Mouda on south, Koradi on East & Rahli on West and is at a distance of about 4 kms. From Mouda town and approachable form NH-6. Nearest railway station is Chacker 8 Kms away from site on Nagpur – Kolkata Broad Gauge (BG) section of south Eastern Railway (main line). The nearest commercial airport is at Nagpur Located at a distance of approximately 42 Kms form the project site.

Vicinity Plan is enclosed.

3.0 LAND

For Stage –I of Mouda project, about 1580 acres of land required for the project is acquired/under acquisition.
About 125 acres of additional land for plant and 50 acres for Township required. The same has been identified contiguous to existing plant and township areas. The township is to be located in North West of the plant area and on Mouda – Ramtek road, 6 Kms away from Mouda town. No major problem anticipated in acquisition as per site visit and discussions with State Govt. officials.

About 550 acres of land is required for ash disposal. Alternatives suggested by Mouda site visited on 09.07.09 and the land near Kirnapur & Kpra villages have been finalized. In principle land availability for Mouda Stage-II has been obtained from Office of the Collector, Nagpur vide letter ref. no. Desk-17/Resettlement/T-1/w.s. 323/09 dated 27.08.09

Bidder may visit the site and acquaint themselves with the facilities available.

4.0 WATER

Make up water requirement for Stage-II of this project would be about 4800 m3/hr. Water requirement for the project will be met form pondage created on river Wain Ganga/ Kanhan by construction of dam near Gosikhurd by Govt. of Maharashtra. Make-up water shall be drawn from above mentioned source and shall be pumped to the raw water reservoir located about 24 Kms from intakes well.

Maharashtra Government has approved the reservation of 100 MCM water including the evaporation losses for NTPC in Goshikhurd Project for the ultimate stage of the project (Stage-1 2x500 MW) + Stage-II (2x660 MW). Ministry of Industries, /energy and a Labour Department, Government of Maharashtra vide letter dated 10.12.2002 has given in principle consent for making available the required water for Mouda project.

5.0 RAILWAY SIDING

Customer intends to construct the railway siding to project site from the nearest existing

railway line. However the same may not be available to BHEL for his use to transport equipment and material.

6.0 COAL AVAILABILITY AND TRANSPORTATION

6.1 COAL AVAILABILITY

Raw coal is proposed as fuel. The annual coal requirement would be about of 7.5 MTPA for 2x660MW of Mouda STTP Stage-II.
Likely coal source for the expansion project is similar to Mouda TPP Stage-I. The matter has been taken up with Ministry of Coal, Govt. of India for Long Term Coal Linkage.

6.2 COAL TRANSPORTATION

Coal is proposed to be transported through Indian Railway network.

7.0 CAPACITY

Stage-I	:	2x500MW	Under construction/Implementation
Stage-II	:	2x660MW	Present Proposal

8.0 CONSTRUCTION POWER

The requirements of the construction power supply for the project would be met from the existing 11 KV. Miscellaneous Switchgear located near 132 KV switchyard. Necessary 11KV ring main/LT sub-stations shall be provided for the required power plant area.

9.0 METROLOGICAL DATA

The metrological data from nearest observatory is placed in section B.

CLAUSE NO.	PROJECT INFORMATION	एनटीपीसी NTPC

ANNEXURE-I

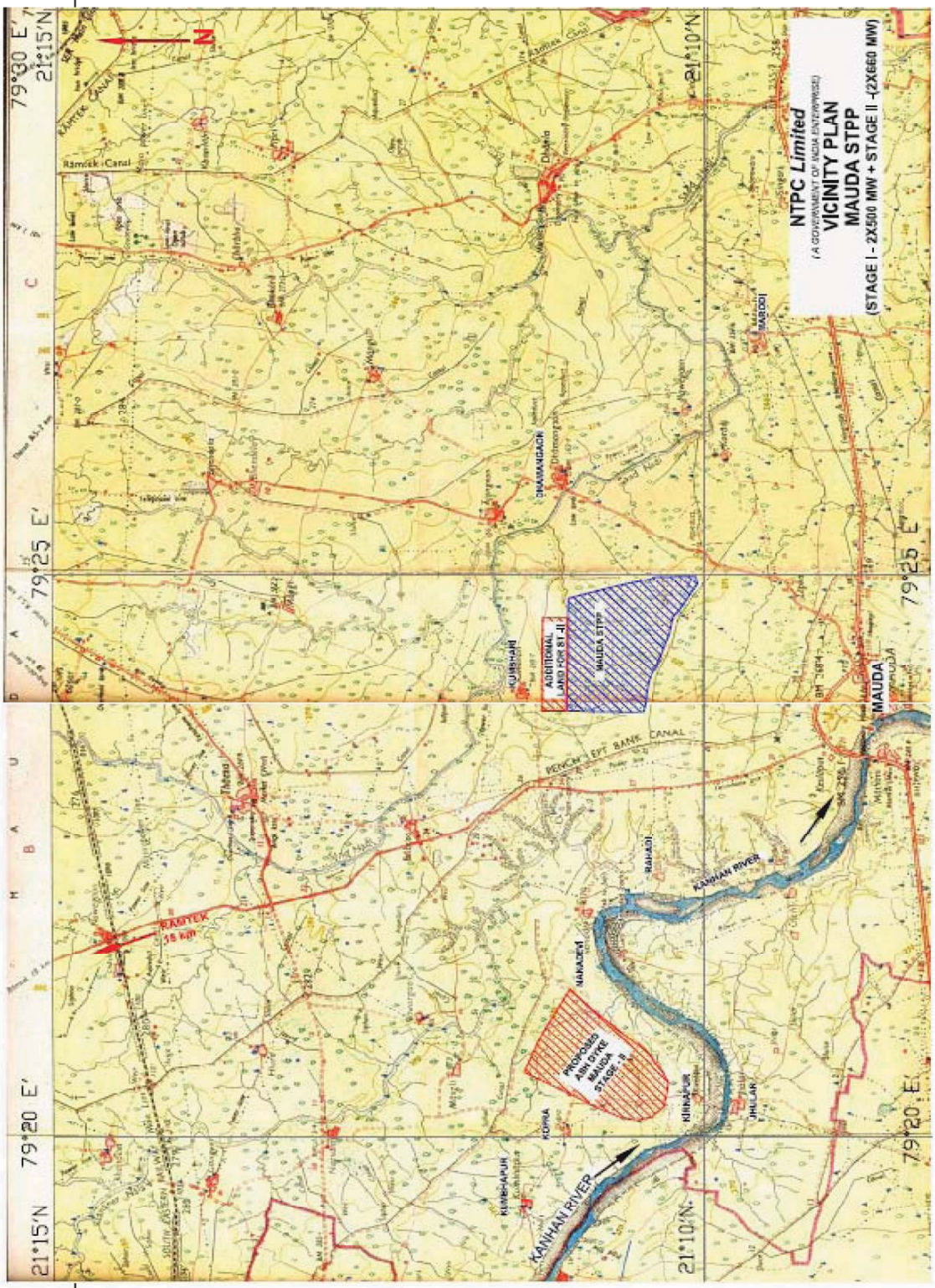

जलवायवी सारणी
CLIMATOLOGICAL TABLE

स्टेशन : नागपुर (सोनेगाव) STATION : Nagpur(Sonegaon) | अक्षांश LAT 21°06′ N | देशांतर LONG 79°03′ E | समुद्री तल माध्य से ऊँचाई HEIGHT ABOVE M. S. L. 310 METRES | मीटर | 1951 से 1980 तक के प्रेक्षणों पर आधारित BASED ON OBSERVATIONS FROM 1951 TO 1980

माह / MONTH		स्टेशन का सतह दाब / STATION LEVEL PRESSURE (एच.पी.ए. / hPa)	वायु तापमान / AIR TEMPERATURE: माध्य / MEAN: शुष्क बल्ब / DRY BULB (डि.से. / °C)	नम बल्ब / WET BULB (डि.से. / °C)	दैनिक अधिकतम / DAILY MAX (डि.से. / °C)	दैनिक न्यूनतम / DAILY MIN (डि.से. / °C)	माह में उच्चतम / HIGHEST IN THE MONTH (डि.से. / °C)	माह में निम्नतम / LOWEST IN THE MONTH (डि.से. / °C)	चरम / EXTREMES: उच्चतम / HIGHEST (डि.से. / °C)	दिनांक और वर्ष / DATE AND YEAR	निम्नतम / LOWEST (डि.से. / °C)	दिनांक और वर्ष / DATE AND YEAR	आर्द्रता / HUMIDITY: सापेक्ष आर्द्रता / RELATIVE HUMIDITY (प्रतिशत / %)	वाष्प दाब / VAPOUR PRESSURE (एच.पी.ए. / hPa)	मेघ की मात्रा / CLOUD AMOUNT (आकाश के अष्टमांश / Oktas of sky): समस्त मेघ / ALL CLOUDS	निम्न मेघ / LOW CLOUDS	वर्षा / RAINFALL: मासिक योग / MONTHLY TOTAL (मि.मि. / mm)	वर्षा के दिनों की संख्या / NO. OF RAINY DAYS	वर्षासहित सबसे नम महीने का योग / TOTAL IN WETTEST MONTH WITH YEAR (मि.मि. / mm)	वर्षासहित शुष्कतम महीने का योग / TOTAL IN DRIEST MONTH WITH YEAR (मि.मि. / mm)	24 घंटों की सबसे भारी वर्षा / HEAVIEST FALL IN 24 HOURS (मि.मि. / mm)	दिनांक और वर्ष / DATE AND YEAR	माध्य पवन गति / MEAN WIND SPEED (कि.मी. प्र. घं. / Kmph)
जनवरी JAN	I	981.1	16.7	13.0	28.6	12.4	31.8	7.9	35.0	29 1900	3.9	07 1937	63	12.1	2.0	0.5	10.2	1.0	105.2 1919	0.0	60.3	07 1960	8.6
	II	977.1	26.1	17.2									38	12.6	2.1	0.8							
फरवरी FEB	I	979.2	20.3	14.3	32.1	15.0	35.8	10.1	38.0	28 1887	5.0	12 1950	49	11.7	1.7	0.5	12.3	1.1	157.0 1942	0.0	51.6	25 1942	7.9
	II	975.0	30.3	18.4									27	11.6	1.9	1.0							
मार्च MAR	I	977.2	25.5	16.7	36.3	19.0	40.1	14.1	45.0	28 1892	6.3	04 1898	36	12.0	1.7	0.5	17.8	1.5	104.2 1957	0.0	45.0	26 1881	8.5
	II	972.4	34.5	19.7									21	11.0	2.5	1.4							
अप्रैल APR	I	974.2	31.0	19.9	40.2	23.9	43.4	19.2	46.1	30 1942	13.9	01 @ 1968	34	14.4	2.3	0.6	13.2	1.4	129.0 1937	0.0	59.4	19 1937	9.6
	II	969.1	38.2	21.6									20	12.4	3.7	2.1							
मई MAY	I	970.1	34.0	21.9	42.3	27.9	45.5	22.9	47.8	26 1954	19.4	04 1917	32	16.5	2.5	0.6	16.3	1.2	164.6 1926	0.0	58.7	05 1966	13.4
	II	965.3	40.2	22.6									19	13.3	4.0	2.5							
जून JUN	I	967.4	30.0	23.8	37.8	26.3	43.5	22.3	47.2	10 1931	20.0	18 1919	61	24.5	5.3	2.0	172.2	9.0	500.6 1881	0.3 1891	315.0	12 1911	14.1
	II	963.5	33.9	24.3									47	22.4	6.3	3.7							
जुलाई JUL	I	967.2	26.3	24.1	31.5	24.1	36.9	21.9	40.6	12 @ 1966	19.4	13 1942	83	28.2	6.9	3.6	304.3	16.0	596.7 1903	69.9 1899	219.2	23 1898	12.0
	II	964.2	29.0	24.7									71	27.7	7.2	4.1							
अगस्त AUG	I	966.3	25.7	23.8	30.4	23.6	33.9	21.9	37.8	25 1899	18.3	20 1939	85	27.9	6.9	3.6	291.6	14.4	595.1 1925	47.0 1882	215.4	04 1979	11.1
	II	965.3	28.1	24.5									75	28.0	7.1	4.2							
सितम्बर SEP	I	971.5	26.2	23.6	31.8	22.9	34.5	20.8	38.9	29 1899	16.6	23 1972	80	27.1	5.4	2.0	194.4	9.4	627.1 1891	46.8 1972	184.4	19 1962	9.5
	II	968.1	28.7	24.1									68	26.4	6.2	3.5							
अक्टूबर OCT	I	976.5	25.1	20.9	32.6	19.8	34.9	15.0	38.3	08 1899	11.6	25 1960	67	21.4	3.0	0.8	51.4	2.8	266.5 1916	0.0	164.6	30 1936	7.6
	II	972.9	29.3	21.7									50	20.3	3.7	1.6							
नवम्बर NOV	I	980.3	21.0	16.4	30.4	14.9	32.7	11.1	35.5	07 @ 1977	6.7	30 1912	60	15.1	2.2	0.4	11.8	0.7	162.3 1946	0.0	81.5	20 1946	7.2
	II	976.7	26.4	18.6									44	15.1	2.6	0.7							
दिसम्बर DEC	I	981.7	17.1	13.5	28.2	12.1	31.0	8.1	33.9	25 1941	5.5	29 1968	64	12.6	1.9	0.4	17.2	0.8	165.7 1967	0.0	61.0	05 1962	6.4
	II	978.0	24.6	16.9									43	13.1	2.3	0.5							
वार्षिक योग या माध्य ANNUAL TOTAL OR MEAN	I	974.6	24.9	19.3	33.5	20.2	45.6	7.1	47.8		3.9		60	18.6	3.5	1.3	1112.7	58.3	1931.4 1933	364.7 1899	315.0		9.5
	II	970.6	30.8	21.2									44	17.8	4.1	2.2							
वर्षों की सं. NUMBER OF YEARS	I	30	30	30	30	30	30	30	100		100		30	30	30	23	30	30	100	100	100		30
	II	30	30	30									30	30	30	23							

CLAUSE NO.

PROJECT INFORMATION

जलवायवी सारणी
CLIMATOLOGICAL TABLE

स्टेशन : नागपुर (सोनेगांव)
STATION : Nagpur(Sonegaon)

माह / MONTH	मौसम परिघटना / WEATHER PHENOMENA: के साथ दिनों की संख्या / No. OF DAYS WITH: वर्षण 0.3 मि.मि. या अधिक / PPT 0.3mm or more	ओले / HAIL	गर्जन / THUNDER	कुहरा / FOG	धूल भरी आंधी / DUST STORM	चंड वात / SQUALL	पवन / WIND: पवन की गति के साथ दिनों की संख्या (कि. मी. प्र. घं.) / No. OF DAYS WITH WIND SPEED (Km. p. h.): 62 या अधिक / 62 or more	20-61	1-19	0	पवन की दिशा के दिनों की संख्या का प्रतिशत / PERCENTAGE No. OF DAYS WIND FROM: उ / N	उ पू / NE	पू / E	द पू / SE	द / S	द प / SW	प / W	उ प / NW	शांत / CALM
जनवरी I	1.8	0.8	1.0	0.6	0.0	0.3	0	0	25	6	34	20	7	3	0	0	1	15	20
JAN II							0	0	25	5	6	17	29	13	9	7	3	3	13
फरवरी I	1.6	0.0	1.4	0.1	0.0	0.7	0	0	24	4	23	23	10	4	1	2	3	16	13
FEB II							0	1	23	4	9	16	14	10	9	11	9	9	13
मार्च I	2.9	0.1	4.4	0.1	0.0	2.3	0	0	25	5	18	22	15	7	3	4	4	13	14
MAR II							0	2	25	4	9	11	10	9	7	13	13	14	14
अप्रैल I	3.3	0.1	5.9	0.0	0.0	3.2	0	2	24	4	11	13	10	10	10	11	7	16	12
APR II							0	3	24	3	8	8	6	10	10	11	17	19	11
मई I	2.8	0.0	5.5	0.0	0.0	4.5	0	11	19	2	10	5	3	5	0	12	16	35	5
MAY II							0	7	22	2	11	7	5	6	5	7	21	28	10
जून I	13.3	0.0	13.4	0.0	0.0	7.5	0	9	21	0	5	1	1	2	6	20	31	31	3
JUN II							0	8	21	1	10	6	3	4	7	18	24	23	5
जुलाई I	21.1	0.0	10.3	0.1	0.0	2.8	0	4	25	2	1	1	1	1	6	33	36	16	5
JUL II							0	6	24	1	4	2	3	3	8	24	32	19	5
अगस्त I	20.1	0.0	8.1	0.2	0.0	1.4	0	4	25	2	2	1	1	3	5	25	39	19	5
AUG II							0	4	25	1	4	2	2	3	6	23	37	20	4
सितम्बर I	14.1	0.0	9.2	0.3	0.0	1.7	0	2	28	2	12	5	2	1	4	13	24	30	9
SEP II							0	2	25	3	12	9	5	3	5	14	23	20	9
अक्तूबर I	4.6	0.0	2.7	0.2	0.0	0.5	0	0	26	5	27	21	8	3	1	2	2	20	16
OCT II							0	0	25	6	12	29	19	6	2	4	4	7	17
नवम्बर I	1.1	0.0	0.5	0.1	0.0	0.1	0	0	27	3	39	31	8	1	0	1	0	10	10
NOV II							0	0	25	5	7	33	31	9	1	1	0	1	17
दिसम्बर I	1.0	0.1	0.6	0.5	0.0	0.1	0	0	25	6	39	20	7	1	0	0	0	14	19
DEC II							0	0	27	4	4	20	40	15	5	1	0	1	14
वार्षिक योग या माध्य I	87.7	1.1	63.0	2.2	0.0	25.4	0	32	292	41	19	14	8	3	4	10	14	20	10
ANNUAL TOTAL OR MEAN II							0	33	293	39	8	13	14	8	6	11	15	14	11
वर्षों की सं. I			28					24						27					
NUMBER OF YEARS II								24						27					

माह / MONTH	मेघ / CLOUD: मेघ मात्रा (वर्षी मेघ) सहित दिनों की संख्या - अष्टमांश / No. OF DAYS WITH CLOUD AMOUNT (ALL CLOUDS) OKTAS: 0	ले-2 / T-2	3-5	6-7	8	निम्न स्तरी मेघ मात्रा सहित दिनों की संख्या - अष्टमांश / No. OF DAYS WITH LOW CLOUD AMOUNT OKTAS: 0	ले-2 / T-2	3-5	6-7	8	कुहरा / FOG 8	दृश्यता / VISIBILITY: दृश्यता सहित दिनों की संख्या / No. OF DAYS WITH VISIBILITY: 1 कि.मी. तक / UP TO 1 Km	1-4 कि.मी. / 1-4 Kms	4-10 कि.मी. / 4-10 Kms	10-20 कि.मी. / 10-20 Kms	20 कि.मी. से अधिक / OVER 20 Kms
जनवरी I	15	6	5	4	1	27	2	2	0	0	0	0.5	5.1	14.8	10.5	0.1
JAN II	13	8	6	4	0	20	7	4	0	0	0	0.0	0.6	1.5	25.4	3.5
फरवरी I	15	8	5	2	0	22	3	3	0	0	0	0.2	3.7	13.4	10.7	0.0
FEB II	11	8	6	3	0	17	7	4	0	0	0	0.0	0.2	0.6	21.8	5.4
मार्च I	16	6	5	3	1	26	3	2	0	0	0	0.1	2.5	11.6	15.5	1.3
MAR II	10	7	8	5	1	15	8	7	1	0	0	0.0	0.4	2.2	21.0	7.4
अप्रैल I	12	7	6	4	1	22	5	3	0	0	0	0.0	0.5	5.4	21.0	3.1
APR II	5	6	12	7	0	7	11	11	1	0	0	0.0	0.0	1.5	20.7	7.8
मई I	11	8	7	5	0	23	5	2	1	0	0	0.0	0.2	3.2	23.3	3.7
MAY II	4	6	12	8	1	0	10	13	2	0	0	0.0	0.3	2.2	20.9	7.6
जून I	2	4	7	11	6	13	6	8	3	0	0	0.0	0.3	3.7	22.7	3.3
JUN II	2	1	6	14	7	1	6	18	5	0	0	0.0	0.6	4.5	20.5	4.4
जुलाई I	0	1	3	13	14	5	6	13	7	0	0	0.0	0.8	5.3	22.0	2.9
JUL II	1	0	2	15	13	1	4	19	7	0	0	0.1	0.6	5.9	20.2	4.0
अगस्त I	0	1	3	13	14	3	7	13	7	1	0	0.0	1.0	5.4	20.7	3.9
AUG II	0	1	2	14	14	0	6	19	7	0	0	0.0	0.7	4.2	21.9	4.3
सितम्बर I	1	4	7	12	6	12	7	8	3	0	0	0.0	0.6	3.7	20.1	5.6
SEP II	0	2	7	14	7	1	9	16	4	0	0	0.1	0.3	2.9	20.3	6.4
अक्तूबर I	9	8	7	5	2	22	5	3	1	0	0	0.0	1.9	7.2	18.2	3.7
OCT II	4	7	10	8	2	10	12	8	1	0	0	0.0	0.1	1.5	22.2	7.2
नवम्बर I	12	7	5	5	1	26	2	2	0	0	0	0.0	2.7	11.2	15.0	1.1
NOV II	10	8	6	6	0	22	6	2	0	0	0	0.0	0.1	1.5	25.6	2.8
दिसम्बर I	14	7	6	3	1	28	1	1	0	0	0	0.2	5.9	14.1	10.6	0.2
DEC II	10	9	7	4	1	24	5	2	0	0	0	0.0	0.2	3.2	26.0	1.6
वार्षिक योग या माध्य I	107	65	66	80	47	229	52	60	23	1	0	1.0	25.2	99.0	210.9	28.9
ANNUAL TOTAL OR MEAN II	70	63	84	102	46	124	90	123	28	0	0	0.2	4.3	31.7	266.4	62.4
वर्षों की सं. I			26					26						26		
NUMBER OF YEARS II			26					26						26		

VOLUME - IIB

SECTION – C

SPECIFIC TECHNICAL REQUIREMENTS

1.0.0. SCOPE OF WORK

1.1.0. SUPPLIES

1.1.1. Equipment and services to be furnished by the bidder for the EOT CRANES with accessories as per the details given in the technical specification and data sheet A. Any equipment / accessories not specified in the specification but required to make the **EOT cranes** units complete and efficient operation shall also be under the bidder's scope of work.

1.1.2 In the event of any conflict between the technical specification of equipment and the specified data sheet of the equipment, the more stringent of the two as per the interpretation of the purchaser shall govern.

1.1.3 Compliance with this specification shall not relieve the bidder of the responsibility of furnishing material and workmanship to meet the specified conditions.

Crane shall include but not be limited to the following: -

a. Bridge girders
b. End carriages with wheels
c. Crab
d. CT/ LT drive arrangement
e. All electrical equipments
f. PVC insulated shrouded Copper conductor cable
g. Earthing arrangement.
h. First fill of lubricant
i. Painting of cranes
j. Temporary cables for operation of each crane during erection stage of the plant (Half the bay length + 25m)
k. Rail
l. Maintenance tools & Tackle
m. Erection & Commissioning spares
n. Mandatory spares
o. Radio Remote Control

p. Lifting beam and sling for tandem operation

q. Operator's cabin

1.1.4 Maintenance Tools and Tackles

A complete unused new set of special purpose tools, tackles and accessories along with detailed instructions and maintenance manual for the crane shall be supplied. Each tool and wrench shall be stamped so as to be identified, easy for its use. The tools shall be supplied in steel toolbox and with a copy of instruction manual. The items supplied shall be of the best quality and specially protected against rusting in tropical climate and minimum the following shall be provided.

S-No.	Description	Qty.
1	Complete set of ring spanners (Indicate the sizes offered)	1 Set
2	Complete set of screwdrivers (Min. 6 Nos., Indicate the sizes)	1 Set
3.	Adjustable Spanner	1 No.
4.	Insulated plier	1 No.
5	Wrench spanner	1 No.
6.	Grease Gun	1 No.
7.	Oil Gun.	1 No.
8.	Hand Lamp.	1 No.
9	Line tester	1 No.
10.	Tool Box.	1 No.

Note: - Each Crane shall be supplied with one set of tool and tackles with O&M manual in the toolbox.

1.1.5 Mandatory Spares

A complete unused and new set of Mandatory Spare parts shall be supplied. Each part shall be stamped so as to be identified, easy for its use. The items supplied shall be of the best quality and specially protected against rusting in tropical climate. The

minimum requirement of mandatory spare parts is listed in Annexure –II section-C, volume II-B of this specification.

1.1.6 Erection and Commissioning spares

The Bidder shall also supply erection & commissioning spares along with his main equipment as per his experience, for replacement of damaged or unserviceable ones during the execution of the project at site, to avoid delay in the project schedule. This shall form part of the main equipment supply. The Purchaser reserves the right to retain the unutilized commissioning spares. The initial fill of lubricants, oil etc. shall also be supplied by the bidder.

Note:

Any Erection and Commissioning spares, if required over and above quoted items, the same shall be supplied by the vendor without any commercial implication to the purchaser.

1.1.7 **Lifting Beam And Slings**

Bidder to include necessary sling also along with Lifting beam. A typical drawing of the lifting beam is enclosed with this Technical Specification for reference. A reference drawing showing the “Lifting Arrangement of Stator Alone” (Drawing no. TGE-2787 Rev. 00)” is also attached.

The drawing indicates endless wire rope sling with Size= 92 dia. (Min.), grade of steel wire as 1770 kN / m^2. Type of construction: 6x36 or 6 x 41, with steel core conforming to IS: 2266 (latest edition). Length of sling should suit as indicated in the drawing.

Bidder may be noted that in case size is not available as per IS: 2266, the next applicable higher size is to be provided.

1.2.0 Services to be provided by the bidder

1.2.1. Packing, forwarding and transportation to site, storage and handling at site.

1.2.2. Arranging test load at site

Collecting the test load at site within a radius of 1 KM from the owner’s storage to final testing bed of each crane shall be under bidder’s scope of work. Test load in the form of rolled steel, plates, girder, angle etc., as available at the site shall be made

available by the purchaser. The test load shall be put back to the place from where it was lifted by the vendor, after the load testing. Load testing sling , cradles and any other item required by the vendor during the load testing shall be arranged by the vendor at no extra cost to the purchaser. Slings will be allowed to be taken back by the vendor, after completion of the test at site.

1.2.3 Erection and Commissioning

1.2.4 Performance test

1.2.5 Operation & maintenance

1.2.6 Obtaining clearance and acceptance certificate from the concerned competent authority after site test. Necessary fees/expenditure as required shall be borne by the supplier.

1.3.0. Inspection and Testing

1.3.1. Inspection and testing at Manufacturer's works

Copy of documents approved with original stamp and signature (one set) shall be available at the place of Inspection. This is to be ensured by supplier.

A. Shop inspection and tests will include but not limited to the following -

i) Identification, co-relation and verification of material test certificates for the important components like girders, major load carrying components, cross head, hooks, gears, shafts, wheels, wire rope drum, wire rope etc. In absence of Original copy of Mill Test Certificates/ photocopy certified by Mill in original, check test to be carried out and original test certificates to be furnished for each heat/ thickness. For other components supporting test certificates or random check tests shall be conducted / furnished. All test certificates shall be in original and legible. Photocopies certified by Mill/ manufacturer of raw material used, are acceptable.

For tensile testing of hooks/ forgings, samples shall be drawn from the full cross section of the shank diameter of hooks/ forgings Samples forged to reduced cross section for testing purposes is not acceptable. **Hooks shall be manufactured from Blooms, billets, rounds by forging with forging ratio of at least 3:1. Hooks manufactured from plates are not acceptable.**

ii Welding procedures and welders shall be qualified as per ASME Sec IX . Only qualified welders shall be employed on the job.

iii 100% radiography of tension zone & 25% radiography of compression zone on butt welds of load bearing members shall be carried out with acceptance norms as per ASME Sec VIII Div.1 UW 51. DP test of all butt welds shall be carried out as per ASTM E 165/ ASTM E 109 with acceptance norms as per ASME Sec VIII Div.1 append.8. Radiographs shall be inspected to a sensitivity of 2%.

iv For fillet welds visual inspection on all welds. Die- penetration test (DPT) for fillet welds in the load bearing members as per ASME-165/ASTME 109 and acceptance norm as per ASME section VIII Div. 1.

v Ultrasonic test on forgings and casting of critical components like **cross head** (hook suspension block), Hooks, Shafts, Axles, Gears, Wheels, Pulleys etc. Ultrasonic test on forgings shall be carried out as per norms given below. UT shall be carried out in Proof machined condition (single diameter/ Flat surface without steps, keyways, teeth cutting or other profile machining which can create difficulty in ultrasonic testing). Components shall be identified with Heat number and serial number by punching). Hardening operation shall be carried out prior to Ultrasonic testing.

Unacceptable defects in forgings are as given below:

1. Cracks, flakes, seams and laps
2. Defects giving indication larger than ‘4 (four) mm diameter equivalent flaw’ except for wheels for which Defects giving indication larger than ‘6 (six) mm diameter equivalent flaw.’
3. Group of defects with maximum indication less than that from a 4 mm dia equivalent flaw which cannot be separated at testing sensitivity if the back echo is reduced by 50% except for wheels for which Group of defects with maximum indication less than that from a 6 mm dia equivalent flaw which cannot be separated at testing sensitivity if the back echo is reduced by 40%.
4. Defects giving indication of 2 to 4 mm dia. equivalent flaw, separated by a distance less than 4 (four) times the size of the larger of the adjacent flaws except for wheels for which Defects giving indication of 3 to 6 mm dia. Equivalent flaw, separated by a distance less than 4 (four) times the size of the larger of the adjacent flaws Ultrasonic test on Castings shall be carried out as per ASTME 609.

Wherever, the Quality plan calls for witness of Ultrasonic test by BHEL or BHEL's representative, the material shall be offered for UT in proof machined condition as stated above and hard stamping and subsequent stamp transferring by BHEL shall be followed at subsequent stages to ensure trace ability.

vi. Dye penetration check/ Magnetic particle check on surfaces subjected to hardening process as per ASTM E 165 / ASTM E 138 respectively with acceptance norms as per ASME Sec. VIII Div.1 append.7 for DP check and ASME Sec. VIII Append. 6 for Magnetic particle check.

vii. Gear boxes shall be checked at No load for backlash, tooth contact, noise and vibration as per Procedure No. PEM (Q)/001 enclosed (attached after Section C)

viii. Test certificates shall for furnished for verification for Type tests including environmental tests - for electrical and electro-mechanical items. If Type tests for items with similar / identical construction are not available, arrangement shall be made to conduct the same in the presence of BHEL/ Customer's representative (as required). Type test Certificates shall be considered valid if the date of test is within previous five years of the date on which ordered items are offered for inspection/ verification

Ix Acceptance and routine tests (HV and insulation) for all electrical and electro-mechanical components and system as per governing specification

x. Functional and simulated operation test, sequencing, interlocks, safety, protection and alarm system shall be carried out for Control Panels. Test on CRANE / CRAB motors and other mechanical, electrical, electromechanical as per BHEL technical specification and / or as per applicable code.

B. Testing At Works.

Cranes shall be completely assembled at manufacturers works to check the misalignment of gears, shafts and other items. Gears shall be run idle for at least 4 (four) hours. Following minimum tests shall be conducted on the crane at the works of the manufacturer:

a) No load running & speed check for LT drive.

b) Deflection test of bridge girder at rated load. Crane shall rest on centerline of LT wheels.

c) Overload test (running of CT and Hoisting mechanism at 125% of the rated load). Capability of crane to lift the overload from mid-air shall be demonstrated.

c) Electrical tests for brakes, panel, electrical equipments etc as per IS - 3177

d) No load run test of LT mechanism

f) All Other tests as per IS-3177.

g) Load /overload testing of lifting beam.

Based on the Quality Plan and witness stages of BHEL & customer, supplier shall submit an inspection plan clearly indicating the no. of hours/ man days required for inspection.

Note: Refer annexue-III, section-C, volume II-B for "Shop test Procedure for Load/Overload testing of T.G. Hall EOT cranes at Manufacturer's Works.

1.3.2 Testing at site

a) All the tests as mentioned against S.N. 1.3.1 (B) above.

b) Speed test at rated load for hoisting / CT and LT mechanism.

c) Brake test.

d) Any other test as per IS-3177-1999.

e) The test shall be carried out with actual panel, RRC , Master controller etc.

f) Bidders' scope of work shall also include, arranging the statutory clearance from the concerned Government body/Authority. It shall be bidder's responsibility to ensure the presence of competent authority at the time of testing and obtaining the clearance and acceptance certificate from the concerned authority. Necessary fees/expenditure as required shall be borne by the supplier.

1.4.0. SURFACE PREPARATION, PAINTING & COLOUR SCHEME

Bidder to refer ANNEXURE-IV A & B ,SECTION –C VOLUME II

2.0.0. Works Excluded

2.1.0 The purchaser shall provide two (2) nos. 415V, 3 phase, and 50Hz. 3 wire Neutral solidly grounded power feeder at any point in the bay or in the middle of the bay as specified in the Data sheet A. Bidder shall provide main isolating switch / change over switch at 1.5 M above the operating floor level and cable required from isolating switch to DSL.

Any other supply required by the bidder shall be arranged by the bidder himself by using suitable transformer as per the specification.

3.0.0. Number of drawing and documents for submission

The number of prints / copies required for various drawing and documents are listed in Annexure –V, section-C, volume II-B of this specification.

4.0.0. Deviations

If the offer submitted has got any deviation from the technical stipulations in the tender document, bidder shall tabulate the same in the appropriate " Schedule of Deviations" furnishing full particular of such deviations. Deviations are to be furnished with mention to specific clause Number. Notes / comments etc. is not acceptable. If there are no deviations from the tender document, bidder shall indicate so. Reasons / explanations for such deviations shall be furnished.

5.0.0. Performance tests

EOT crane along with its drives, controls and other accessories shall be guaranteed for the rated capacity against the rated speed of motions and for the service conditions specified.

The bidder shall have the full responsibility for the safe and efficient operation of the crane with associated accessories as a single unit. If the shop/site performance tests indicate the failure of any of the components to achieve the guaranteed performance, the deficiency shall be made good at bidder's cost.

Performance tests shall be carried out each time after the rectification /modification is carried out.

PG test of the crane shall include load tests and speeds in various motions at site.

6.0.0. Makes of Sub - Vendor items

The makes of bought out items will be as per Annexure-I, section C, volume II-B of the specification. No other make will be acceptable, until and unless specifically got approved by BHEL/Customer during detail engineering. Acceptance/non acceptance of same shall not have any impact on manufacturing & delivery schedule and on cost of crane.

7.0.0 Scope of Documentations

The supplier shall submit required number of copies of each document as per ANNEXURE-V DRAWING AND DOCUMENTS FOR SUBMISSION

These documents shall be completed in all respects. These will be including but not limited to the following: -

- System Description
- System Performance
- Specification documents
- Design documents
- General layout drawings
- System block and level diagram
- Operation documents
- Maintenance and service documents
- As Built drawings
- Software documents
- All documents shall be available in electronic for accompanied by the accessories of software or PC.

8.0.0 Specific technical requirement for electrical

a) The purchaser shall provide two (2) nos. 415V, 3 phase, and 50Hz. 3 wire Neutral solidly grounded power feeder at any point in the bay or in the middle of the bay as specified in the Data sheet A. Bidder shall provide main isolating switch / change over switch at 1.5 M above the operating floor level and cable required from isolating switch to DSL. Termination of the incoming cables to the isolator shall be in bidder's scope of work. Any other supply required by the bidder shall be arranged by the bidder by using suitable transformer as per the specification.

b) Two numbers isolating switches in enclosure at extreme ends of operating floor for disconnecting supply to DSL while maintaining the crane.

c) DSL is to be sized considering maximum length from changeover switch and with a margin of 10% over load requirement. The DSL shall be designed to limit voltage drop at motor terminals within 2% for single length considering the voltage drop in the power cable i.e. from changeover switch to DSL along with voltage drop in DSL and cable sizes shall be selected accordingly. Suitable guards of MS sheet to live electrical wiring down shop leads shall be provided.

SUBJECT : OPERATION AND MAINTENANCE SERVICES SHALL INCLUDE BUT NOT LIMITED TO FOLLOWING

1.0 Scope covers operation and maintenance service including manpower, supervision, consumables etc for complete operation and maintenance of the cranes after successful erection , commissioning and load testing.

2.0 For Operation of the Crane
Experienced crane operators shall be available as and when required by BHEL for at least 16hrs a day, daily.

3.0 For Maintenance of the Crane

a) Break-Down Maintenance

i) In case of any break-down of the crane during the contract period, service engineer shall be made available at site within 72 hrs.

ii) All the critical spares and consumables, as deemed necessary by the manufacturer shall be made available at the site. No delay in crane maintenance shall be allowed by BHEL due to non-availability of required spare at site.

b) Preventive Maintenance

i) Following work should be carried out quarterly

Bridge and Trolley wheel assy	Checking for wear, flat spots and cracks in flange. Ensure drive wheels are of the same diameter.
Runway	Checking alignment and elevation of gantry track. Checking rail clamp bolts.
Machine Bolts	Checking all foundation bolts of Electrical and Mechanical equipments for tightness.
Structural Bolts	Checking for tightness. They should also be checked after the first month of operation.
Flexible Couplings	Checking pins and teeth for wear, cleaning and greasing.
Cross-shaft Plummer Blocks	Dismantling cap. Cleaning and checking oil seals and to be packed with fresh grease.
Trolley Collectors	Checking of cable trolleys / cabling / chain. Ensuring connection of trolley wheels is kept through entire length of span.
Brakes	All Brake assembly will be checked for loose connection, earthing connection, linings for wear, leakages and adjustments to ensure brake is not rubbing the brake drum during operation. Greasing pins and operation adjustment of brakes.
Resistor Connections	Checking, tightening connections at grid joints and at cable terminations.

Control Station	Clean out control cabinets. Checking of all connection at push buttons, master controllers contact tips, cams and terminals.
Control Panels	All Control Panels will be checked for loose connection and cleaning the contactor contacts, if required will be replaced.
Electrical Motors	All motion motors connection will be checked for loose contacts in terminal box loose crimping of wire lugs, loose contacts on slip ring assembly with carbon brush. Earthings connection with motor.
Safety Switches	All limit switches will be checked for desired operation and limits. Emergency switches will be checked.
Main Collectors	Checking of worn collector shoes, sag in main runway wiring, ensuring contact is kept through entire length runway properly.
Electrical connections	Checking throughout electrical equipments for loose connection such as selector switches, junction boxes, min isolator switch etc.
Lubrication	All gear box and thrusters' oil level will be checked. All bearings, couplings' grease will be checked.
Testing	After completion of checking and required rectification, trolley will be checked for idle operation, for brake operation, limit switch operation & safety switch operation. All motor currents will be checked on no load.

ii) Following work should be carried out annually

Gear Boxes	Oil seals will be checked, if required will be replaced. Gear and pinion teeth will be checked. Drain the oil cleaning gear box and refill fresh oil.
Motor	All motors' insulation test and meager test will be carried out.
Resistance Box	All resistance boxes' step resistance value will be checked.

iii) Besides the quarterly and annual preventive maintenance schedule mentioned above, operator shall carry out any daily, weekly, monthly maintenance schedule as deemed necessary and shall operate the crane only when the fitness of the crane for operation has been ensured.

4.0 Bidders' scope of work shall also include, arranging the statutory clearance from the concerned Government body/Authority as and when required for renewal of license during the O & M period. It shall be bidder's responsibility to ensure the presence of competent authority at the time of testing and obtaining the clearance and acceptance certificate from the concerned authority. Necessary fees/expenditure as required shall be borne by the supplier.

1.0.0	**Scope: Acceptance Norms for Crane Gear Boxes**
1.1.0	This procedure lays down the Acceptance norms for the Gear boxes for EOT crane. This standard also covers vertical gear boxes. Reduction Gears shall be tested for reduction ratio, backlash & contact pattern. Gear Box shall be subjected to No load run test to check for oil leakage, temp. rise, noise and vibration.
2.0.0	The following dimensions shall be checked:
2.1.0	i. Diameter and keyway dimensions of input and output shafts. ii. Projection of input and output shafts beyond foundation holes and Centre lines of gear box. iii. Centre distance between input and output shafts. iv. Centre Height. v. Distance between foundation holes with respect to center line of the output shaft and distance of foundation holes from center line of the gearbox. vi. Overall dimensions
3.0.0	**Backlash**
3.1.0	The back lash shall be checked by dial gauge preferably (refer Figure –1). Lead wire may be also be used but final decision in case of dispute shall be taken by using dial gauge. The backlash shall be within the limits specified in the drawing. If the value of the backlash allowed is not specified in the drawing, the allowed backlash shall be a given in Table-1
4.0.0	**Area of Contact:**
4.1.0	Area of contact shall be taken by applying Prussian blue. The contact area shall be within the limits mentioned below (refer Figure –2) For final stage of Hoist gearing: h / H shall be more than 30% (a – c) / b shall be more than 40% For all other gears: h / H shall be more than 40% (a – c) / b shall be more than 50%
5.0.0	Running Test
5.1.0	The gear boxes shall be run under no-load condition at the rated speed for minimum

	four hours in each direction and the following are to be checked: i. All bolts at the joints remain tight ii. All gear mesh lines are getting enough lubrication iii. All bearings are getting enough lubrication iv. Bearing temperatures after running for four hours shall not exceed 50 deg. Centigrade or 15 deg. centigrade above ambient whichever is higher. Temperature shall be checked after every hour. v. Vibration : Maximum limit 125 microns (peak to peak) vi. Sound: The gearbox shall not emit unusual sound as obtained under conditions of hard meshing, high spots etc. Maximum sound level shall be 85 dBA at a distance of 1000mm and 91 dBA at a distance of 300 mm. vii. There shall be no Oil leakage at parting lines, bearing housings or inspection covers.
6.0.0	General
6.1.0	In addition to the above specific points, the following general points shall be ensured: i. Inspection pockets are provided as required. ii. Gear box casings are provided with at least two fit bolts/dowels at the parting line. iii. Dip sticks with minimum / maximum level markings are provided. iv. Drain plugs are provided at convenient locations preferably at vertical wall of the housing. v. Breathers are provided. vi. Lifting lugs or eye bolts ar provided as required. vii. Wherever bearings have splash lubrication, oil retainers are provided. viii. Gear boxes are painted as per specification outside and inside. Inside surfaces shall be painted with Oil proof paint. ix. In case of vertical gear boxes having more than two stage reduction, forced lubrication is also provided. Name plate should provide information eg. Ratio, KW rating, Bearing details and manufacturers name.

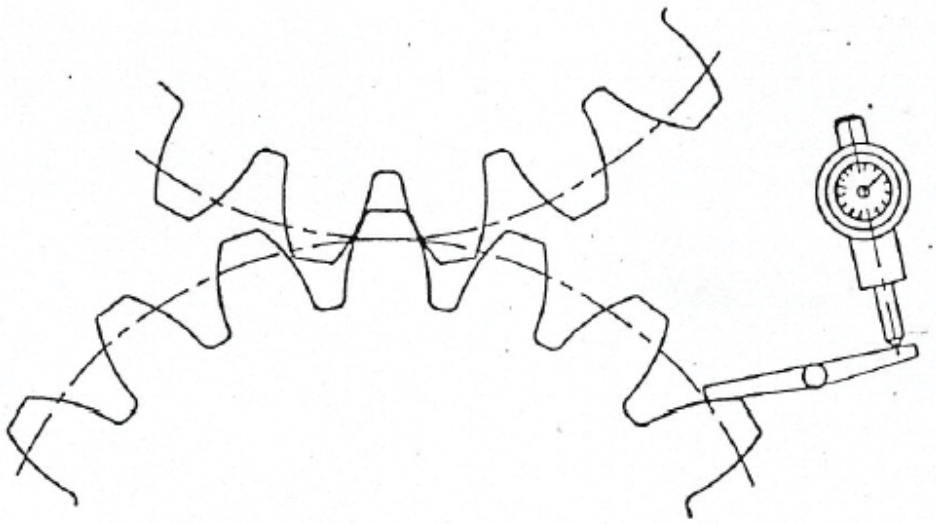

FIG.1 MEASUREMENT OF BACKLASH

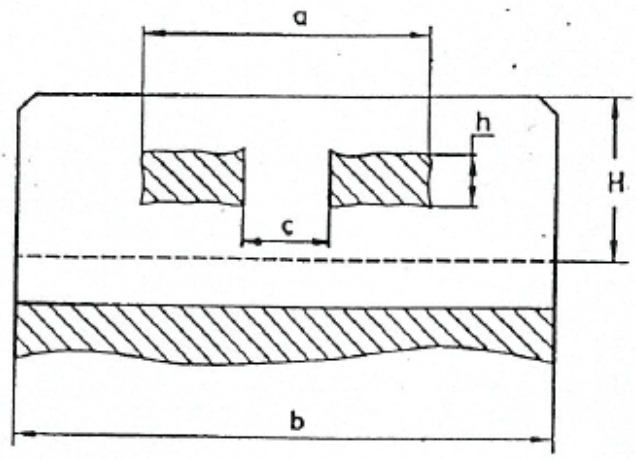

FIG.2 AREA OF CONTACT OF GEAR TEETH

Table-1

Backlash for Gearing specified by module

(Clause 3.1.0)

Centre distance in mm		Tolerances in microns		
Above	**Upto**	**Minimum**	**Maximum**	
			For gears other than Drum gears	**For Drum gears**
			For all modules 1 to 50	**For all modules 2.5 to 50**
-	50	85	240	280
50	80	105	320	380
80	120	130	360	420
120	200	170	470	530
200	320	210	540	640
320	500	260	660	740
500	800	340	820	880

800	1250	420	970	1040
1250	2000	530	1200	1280
2000	3150	710	1500	1670
3150	5000	850	1810	1980

FIRST ANGLE PROJECTION (ALL DIMENSIONS ARE IN mm)

FORM: DG 46(B)

DRAWING NO.

THIS IS A PART OF TECHNICAL SPECIFICATION
PE-TS-387-501-A001

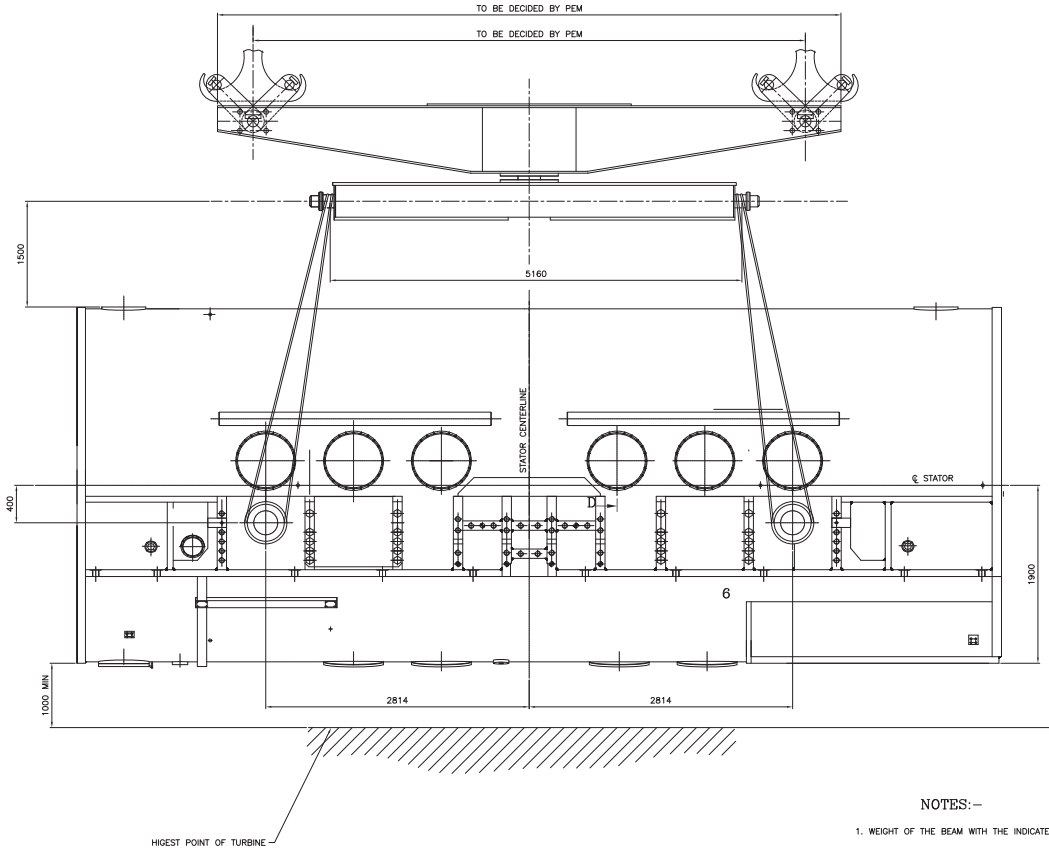

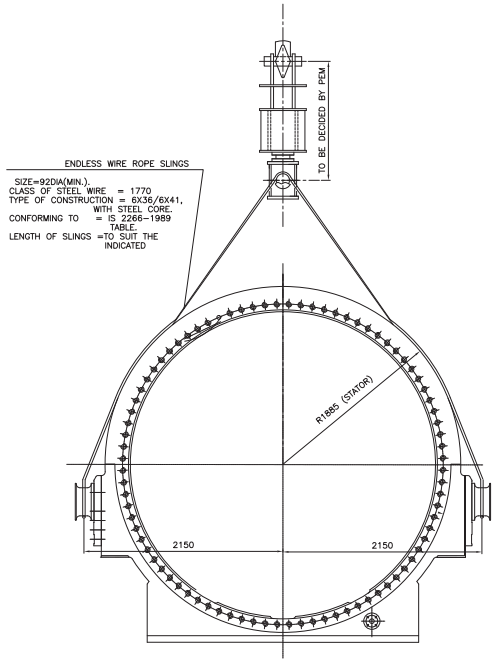

NOTES:-

1. WEIGHT OF THE BEAM WITH THE INDICATED ARRANGEMENT TO BE USED FOR DECIDNG CRANE CAPACITY.
2. WEIGHT OF THE PACKED STATOR WITH COOLER HOUSING AND TERMINAL BUSHING BOX IS 326 TONNES.
3. DIFFERENCE IN THE LIFTS OF TWO CRANE AT ANY TIME SHOULD NOT EXCEED 200MM.
4. THE ARRANGEMENT SHOWN IN THIS SHEET IS FOR STATOR ALONE BROUGHT TO TG DECK TO BE PLACED ON PEDESTALS.

TECHNICAL REQUIREMENTS

1. THE DETAIL OF LIFTING BEAM WITH SWIVELLING ARRANGEMENT INCLUDING MATERIAL IS TO BE DONE BY THE PEM, FOR A MAXIMUM LIFTING CAPACITY OF 326 TONNES,
2. THE LOAD TESTING SHALL BE CARRIED OUT BY THE PARTY, MIN. ACCEPTABLE LIMIT SHALL BE 25% OVER LOAD OVER THE RATED CAPACITY OF 326 TONNES.

COPYRIGHT AND CONFIDENTIAL
THE INFORMATION IN THIS DOCUMENT IS THE PROPERTY OF BHARAT HEAVY ELECTRICALS LIMITED
IT MUST NOT BE USED DIRECTLY OR INDIRECTLY IN ANY WAY DETRIMENTAL TO THE INTERESTS OF THE COMPANY.

GRADE OF UNTOL. DIM.:-			
M/CG- V/C/M/F AA 0230208			
WELDING-A/B/C/D-AA621104			
GAS CUTTING-"I3"AA0621101			
REV.	DATE	ALTERED / CHECKED	

CBOM NO.			STATUS OF DRG.
AGREED DEPT.	NAME	SIGN	DATE

TYPE OF PRODUCT OR NAME OF CUSTOMER/ PROJECT: 600 / 660 MW GENERATOR

BHARAT HEAVY ELECTRICALS LTD. HARDWAR

	NAME	SIGN	DATE	NO.OF VAR.
DRN				
CHD				
APD				

DEPT.	MATERIAL	WEIGHT (KG.)	REF. TO ASSY. DRG.	ITEM NO.	NO.OF ITEMS
CODE					

TITLE: LIFTING ARRANGEMENT FOR STATOR ALONE

DRAWING NO. TGE-2787

SHEET NO. 1 NO.OF SHEETS 1

SIZE A0

ANNEXURE-I

MAKES OF SUB VENDORS ITEMS

S.N.	ITEM	MAKES
1.0	STEEL	SAIL / IISCO / TISCO / JINDAL/ESSAR/ISPAT
2.0	HOOKS	KARACHIWALA / HARMAN MOHTA Steel Forging & Engg. Co., Kolkata/ SIMRITI FORGING
3.0	GEAR COUPLINGS	ALLIANCE / HICLIFF / OEM/SAHARA/NUTECH
4.0	WIRE ROPE	USHA MARTIN / BOMBAY WIRE ROPES / /FORT WILLIAMS / UNITED WIRE ROPE / Bharat Wire Ropes.
5.0	BEARINGS	SKF/ FAG/ TATA/ NORMA / NBC/ZKL
6.0	MOTORS	SIEMENS / NGEF/ CROMPTON / KIRLOSKAR / BHARAT BIJLI / ALSTOM / ABB (NGEF UPTO 15kW only)
7.0	BRAKES	STROM CRAFT/ ELECTROMAG /SPEED-O- CONTROL
8.0	CONTACTOR	SIEMENS / L&T /TELE MECHANIQUE / BCH
9.0	OVER LOAD RELAYS	SIEMENS / L&T / TELE MACHANIQUE / ABB
10.0	HRC FUSES	SIEMENS / L&T/ ENGLISH ELECTRIC / GE Power
11.0	ISOLATING SWITCH	SIEMENS/ L&T./ GEC A / CONTROL & SWITCH GEAR
12.0	SWITCH FUSE UNITS	SIEMENS/ L&T/ CONTROL/ & SWITCH GEAR/ GEC A
13.0	TIME DELAY RELAYS	SIEMENS/ L&T/ ABB/ BCH/ GEC A /TELEMECHANIQUE
14.0	TRANSFORMERS	INDCOIL / LOGICSTAT/ KAPPA / AUTOMATIC ELECTRIC / SILKAAN ELECTRIC MFG. CO. LTD. / SOUTHERN ELECTRIC
15.0	BULB & FLOURESCENT TUBES/FITTINGS	PHILIPS/ BAJAJ/ CROMPTON
16.0	CABLE LUGS (HEAVY DUTY)	DOWELLS / UML ENGINEERS, KOLKATA/JAINSON
17.0	HOOTERS	BEACON / OSC/TARGET / KHERAJ
18.0	LIGHTING SWITCHES	ISI MARKED
19.0	CABLES	
a)	Power Cables	Nicco / Universal / Incab / Torrent / CCI / ICL / Radiant/POLYCAB

b)	Control cables	Nicco / Universal / Incab / Delton / Finolex / Torrent / CCI / ICL / Radiant
c)	Trailing Cables	Nicco / Universal
20.0	Cable gland	COMMET / SUNIL&CO. / ARUP ENGINEERING
21.0	PUSH BUTTONS	SIEMENS / L&T / BCH
22.0	Limit Switches	Speed-o-control / Electromag
23.0	Master Controler	Speed-o-control / Electromag
24.0	Safety switches	Alsthom / L&T / Siemens
25.0	Pendent Push button station	OEM
26.0	Indicating Lamps	Tecknic / BCH / Siemens / Standard/Telemechanique
27 .0	MCB	MDS / Indo Copp / Standard/Siemens/L & T
28.0	Panels	OEM
29.0	Resistance boxes	OEM
30.0	Fire Extinguishers	BSI Approved Makes
31.0	Insulators & Copper Conductors	BHEL approved make
32.0	CASTING	KOLHAPUR STEEL / GNAT FOUNDARY / KIRTI ALLOYS
33.0	VVVF	YASKAWA (L&T) / ABB / SIEMENS/SCHNIEDER
34.0	Shrouded DSL	Susheel/ Stromag

Note: All the trailing cables shall be sourced from only one sub-vendor from the list

2X660 MW MOUDA STPP, STAGE II- TG PACKAGE		
MANDATORY SPARES LIST FOR DOUBLE GIRDER TG HALL EOT CRANE		
	SPECIFICATION NO PE-TS-387-501-A001	ANNEXURE II
S. No	DESCRIPTION OF EQUIPMENT / ITEM	Qty
1	2	3
A	MECHANICAL	
1	Bearings for long travel wheels	1 set
2	Bearings for cross travel wheels	1 set
3	Bearings for Gear Boxes for each type of Hoist	1 set
4	Brake Liner for all the brakes including jaws for rail clamps of Storm brakes.	1 set
5	Hydraulic thruster for all the Brakes	1 set
6	Oil Seals	1 set
7	Brake springs for all brakes	1 set
8	Wire Rope for Aux. hook	1 no
9	Contactors, push buttons and relays	1 set
10	Oil pumps with motor & hydraulic cylinder for operation of jaw of the storm brakes	1 no of each type /size
B	ELECTRICAL	
1	Solenoid Coils for Brakes	2 sets
2	MCBs/MCCBS/Fuse links for the whole crane	1 set
3	Contactors and overload Relays	1 set of each type, size & rating
4	Motor of the EOT	1 set of each type size and rating
5	Timers of each type, size & rating	1 set
6	Limit Switches for	
(a)	Main Hoist	1 set
(b)	Aux. Hoist	1 set
(c)	Cross Travel	1 set
(d)	Long Travel	1 set
7	Carbon brushes and brush holder	1 Set
8	Master controller for Aux hoist	1 Set
9	Resistance Box	1 no of each type.
10	Drives for MH,AH,CT & LT	1 no of each type & rating
NOTE		
1	Unless stated otherwise a 'set' (marked by **), it will include the total requirement of the item for a unit module or the station as specified. Where it is specified as "set" (marked by *) it would mean the requirement for the singe equipment/system as the case may be. Also are set for the particular equipment e.g. 'set' of bearings for a pump would include the total number of bearings in a pump. Also the 'set' would include all components required to replace the item; for example a set of bearing shall include all hardware normally required while replacing the bearings. It is further, intended that the assembly/sub-assembly which have different orientation (like left hand or right hand, top or bottom), different direction of rotation or mirror image positioning or any other reasons which result in maintaining two different sets of the spares to be used for the subject assembly/sub-assembly, these shall be considered as different types of assembly/sub-assembly.	
2	Wherever quantity has been specified as percentage (%), it shall mean percentage (%) of the total population of the item in the station (project),unless specified otherwise and the fraction will be rounded off to the next higher whole number.	
3	Wherever the quantities have been indicated for each type, size, thickness,material, radius, range etc. these shall cover all the items supplied and installed and the break up for these shall be furnished in the bid.	
4	In case spares indicated in the list are not applicable to the particular design offered by the bidder, the bidder should offer spares applicable to offered design with quantities generally in line with the approach followed in the above list.	

2X660 MW MOUDA STPP, STAGE II- TG PACKAGE		
MANDATORY SPARES LIST FOR DOUBLE GIRDER TG HALL EOT CRANE		
	SPECIFICATION NO PE-TS-387-501-A001	ANNEXURE II
S. No	DESCRIPTION OF EQUIPMENT / ITEM	Qty
1	2	3
5	All spares supplied under this contract shall be strictly interchangeable with parts for which they are intended for replacements. These spares should include all mounted accessories like components, boards, add or items,fitting, connectors etc. and be complete in all respects so that the replacement of the main items by these spares does not require any additional item. The vendors must conform the pair to pair compatibility of each electrical spares modules with the modules should be supplied in the original package. All electronic modules should be pre set and/or preprogrammed for ready use at site. Alternatively, suitable instruction sheet indicating the details of required PCB jumper position, BCD which is setting,EPROM/PROM listing etc should be packed along with each module. Also a caution mark sign should be put on all such module which needs pre setting/pre programming before putting them in to service. The spare shall be treated and properly packed for long term storage	
6	Each spare shall be clearly marked and labeled on the outside of the packing with its description. When more than one spare part is packed in single case,a general description of the contents shall be shown on the outside of such case and a detailed list enclosed. All cases, containers and other packages must be suitably marked and numbered for the purpose of identification.	
7	Accordingly unless stated otherwise a "set" means items or sub-items required for each type / size/ range of the assembly/ sub asembly required for complete replacement in one equipment/ system as the case may be. It is further intended that the assembly / sub assembly having different orientation (like left hand or right, top or bottom), different direction of rotation or mirror image positioning or for any other reasons result in maintaining two or different sets of spares to be used for the subject assembly / sub assembly, these shall be considered as different types of assembly / sub assembly.	

ANNEXURE-III

Procedure for Load/Overload testing of T.G. Hall EOT cranes at Manufacturer's Works

Objective: To demonstrate final NO load / Load / Overload / Deflection / Functional tests of assembled crane/s for the purpose of acceptance.

Basic Assumptions / Inputs for testing at Works:

- Actual job hook shall be used for load / overload tests for hoisting.
- Actual ropes shall be used for load / overload testing.
- Shop cables can be used for temporary connection for the purpose of showing various functional tests at shop.
- Interlock and limit switch operation check will be shown with load for hoisting and CT motion.

Procedure for Load / Overload testing:

The cranes shall be tested for no load ,load test & overload test at works generally in conformance with the IS – 3177 (latest edition). Specifically with respect to the load / overload testing of crane, the following tests as per the outlined procedures shall be done at works.

- Deflection of the girder will be measured at SWL when the trolley with load is at the middle of the girder.
- No load and full load current of the motors will be measured to verify whether it is as per the approved data sheet of the motor. Resisters in the circuit will be checked for any overheating of the element.
- Overload relays will be checked for proper functioning.

Hoisting & Cross Travel motions:

The load will be gradually raised to 125 percent of the rated capacity (SWL) with actual hook. The load will be lifted upward to about 1 meter height above its support and stop again. Check for any undue drift in the load. If load drifts, check the adjustment of brakes and repeat the above procedure. Then lower the load to rest on support/ground.

For checking the cross travel, raise the load up to one (1) meter height above supports and then move the trolley with load about one (1) meter in either direction of the bridge. Then lower the load to rest on support/ground.

Creep speed motions shall be checked over a distance of about 500 mm.

Demonstration test for hydraulic rail clamps: Holding capacity of the rail clamps shall be demonstrated by making suitable facility at the manufacturer's works which shall also be witnessed by BHEL/End customer. Hydraulic or mechanical jack with calibrated gauges for load indication can be used for this purpose.The actual procedure for this shall be got approved by the bidder from BHEL/Customer during detail engineering.

Note: Complete No load / load / over load tests in line with IS-3177 (latest edition) shall also be done after erection of EOT crane at site.

1.0 SCOPE

This covers the guidelines for load testing of lifting beams of EOT cranes.

2.0 ACCESSORIES AND FACILITIES NEEDED.

a) Slings of suitable size and length , proof load tested at 2 X Safe working load (SWL).
b) Jacking system.
c) Supporting structure
d) Test loads.
e) Cradle for accommodating test load (if required).

3.0 PROCEDURE

1) Support the lifting beam on fabricated structure and hydraulic jacks at both ends as indicated in the attached sketch no LB/001.
2) Place the load to be lifted under the lower lifting beam. Total test load shall be 1.25 times the SWL.
3) Drop the lifting slings from the lifting beam and safely tie it with the load.
4) The sling should be tied with the lifting beam such that the slings should not be slack. This should ensure that the slings are in full tension when the lifting beam is elevated by at least 100mm.
5) Fix the necessary measuring instrument in the lifting beam with wire and plumb to measure the initial reading for vertical deflection of both lower and upper lifting beam.
6) Now elevate the lifting beam by means of hydraulic jacks , such that the lifting beam is elevated by at least 100mm.
7) Ensure that the whole load is lifted clear from the floor.
8) Ensure that the elevation is equal at both ends.
9) Now the load is lifted by 100 mm and hence the sling is in full tension.
10) Keep the load in lifted condition for one minute.
11) Measure the deflection of the lifting beam structure.
12) Bring down the lifting beam to its original position with the help of jack.
13) Make the lifting beam free from testing position and put in safe place.
14) Visually check the weldments of lifting beam and carryout DP test in case of doubt.

4.0 REMARKS

1) The dimensions of stand , cradle etc in sketch no LB/001 are illustrative only. Bidder to make suitable arrangement as per their shop facility.
2) In case the bidder has test pit facility instead of stands (illustrated in sketch LB/001), the same can also be used.

THIS IS PART OF TECHNICAL SPECIFICATION NO PE-TS-387-501-A001

LB/001

IF IN DOUBT ASK

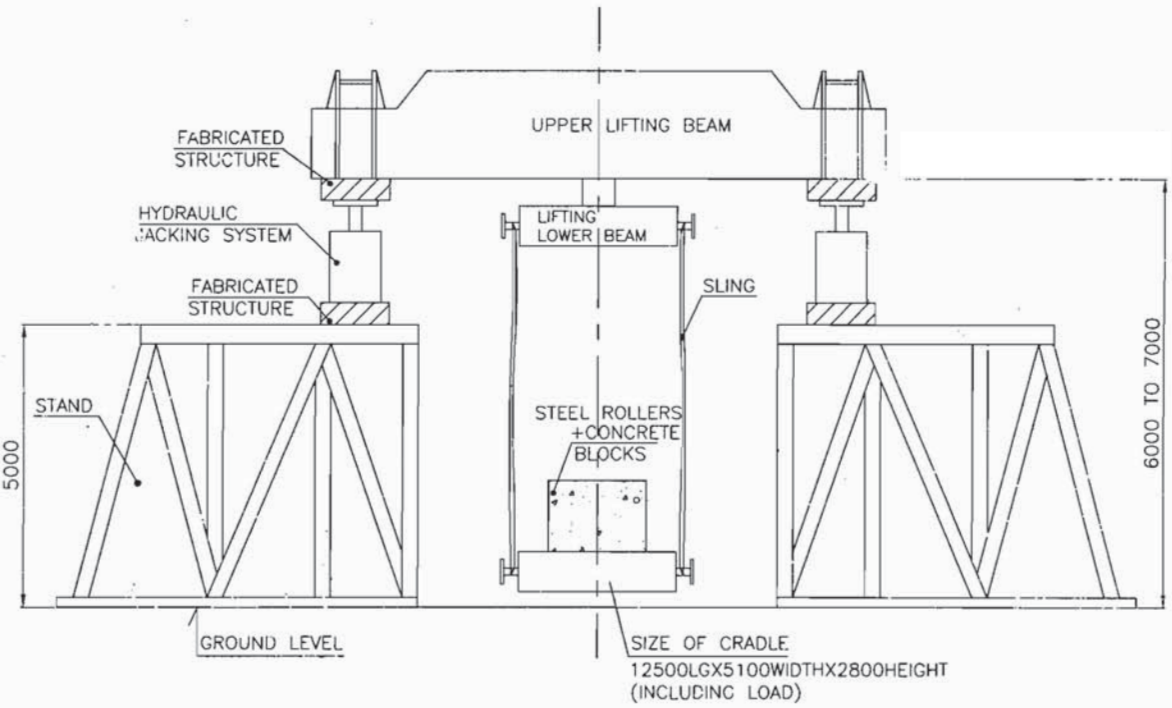

NOTE:--

1 ALL DIMENSIONS ARE IN MM.
2 TOTAL TEST LOAD =1.25XSWL OF LIFTING BEAM
3 DURING LOAD TEST IT SHALL BE ENSURED THAT TOTAL TEST LOAD IS LIFTED ABOVE THE RESTING SURFACE

SKETCH NO LB/001.

THIS DRAWING IS THE COPYRIGHT AND PROPERTY OF UNIQUE AND MUST NOT BE COPIED, MADE PUBLIC OR SHOWN TO A THIRD PARTY WITHOUT THE WRITTEN CONSENT OF THE COMPANY.

		MANUFACTURER NAME & ADDRESS			MANUFACTURING QUALITY PLAN				PROJECT : 2 X 660 MW MOUDA TPP STAGE II					
					ITEM: 343T LIFTING BEAM ASSEMBLY FOR 200/20 D/G EOT CRANE		QP. NO. :		PACKAGE :-TG HALL EOT CRANES					
							BHEL DRG. NO.:		CONTRACT NO.:-					
							Rev. 0							
							DATE :	25.10.12						
SR. NO.	COMPONENT & OPERATIONS		CHARACTERISTIC	CLASS	TYPE OF CHECK	QUANTUM OF CHECK	REFERENCE DOCUMENT		ACCEPTANCE NORMS	FORMAT OF RECORD		AGENCY		REMARKS
1	2		3	4	5	6	7		8	9	D	10		11
1)	For lifting beam (lower & upper lifting beam)											M	C	N
i)	Material		Chem. & Phy.	Major	Co-relation with T.C. Check test in absence of T.C.	1/heat/batch	IS:2062		IS:2062	Mfgr's TC or test report	√	P	V	V	
			UT on plates	Major	Ultrasonic	100%	ASTM A 435		ASTM A 435	intrrnal insp . Report	√	P	V	V	UT on 25 mm & above 25 mm thick plate
ii)	Weld set up		Dimensional conformity	Major	Measurement	100% for butt weld joint	Component drawing		Component drawing	inspection report		P	-	-	
iii)	Pins for Slings & Hooks		Chem. & Phy.	Major	Co-relation with T.C. Check test in absence of T.C.	100%	Mfg.drg/EN-9(070M55) / BS - 970-1983.		Mfg.drg/EN-9(070M55) / BS - 970-1983.	Mfgr's TC or test report	√	P	V	V	IF DIA >= 50mm UT to be Applicable.
			U.T		U.T		ASTM A388		ASTM A388		√	P	V	V	(U.T Procedure Attached)
vi)	Wire rope		Identification,Grade & dimensional conformity breaking strength	Major	Visul corelation with TC	100%	IS:2266		IS:2266	T.C.	√	P	V	V	
2)	Welding													
i)	Check for welding procedure qualification & welder's performance		Welding parameters	Major	Review of earlier appd. WPS/WPQ/ PQR records	100%	ASME SEC IX		ASME SEC IX	WPS/WPQ/PQR records as per ASME SEC -IX format	√	P	V	V	WPS already approved by NTPC shall be valid. In case NTPC/ LIOYDS qualified welders already available & doing the same job regularly, re-qualification is not required. Alternatively welder qualified by above agences will be utilised.
ii)	Back chipping		Surface defects	Major	DPT	100%	IS-3658		ASME - Sec. VIII Div 1 Appen.-8	inspection report	√	P	V	V	
a)	Butt-Weld		Weld Quality	Critical	Gamma ray radiography	100% in tension & 25% in compression.	ASME SEC VIII		ASME SEC VIII Clause UW -51	RT report & Film	√	P	V	V	Review of inspection report, Radiography report & film is CHP.
				Major	DPT	100%	IS: 3658		IS :3658 / ASME SEC VIII Appnd. 8	inspection report	√	P	V	V	

LEGEND:

RECORDS IDENTIFIED WITH 'TICK (√) SHALL BE ESSENTIALLY INCLUDED BY CONTRACTOR IN QA DOCUMENTATION

"M" MANUFACTURER/ SUBCONTRACTOR

"C" CONTRACTOR(BHEL)

"N" CUSTOMER (NTPC)

INDICATE "P" PERFORM, "W" WITNESS AND "V" VERIFICATION AS APPROPRIATE.

" CHP" SHALL IDENTIFIED IN COLUMN " N "

NOTE: ITEMS NOT COVERED IN MQP, MAY BE CLEARED ON BASIS OF "CERTIFICATE OF CONFPRMANCE"

Manufacturer/ sub-contractor	Contractor	FOR CUSTOMER USE	
SIGNATURE		REVIEWED BY	APPROVED BY / APPROVAL SEAL

MANUFACTURER NAME & ADDRESS	MANUFACTURING QUALITY PLAN		PROJECT : 2 X 600 MW MOUDA TPP, STAGE II
	ITEM: 343T LIFTING BEAM ASSEMBLY FOR 200/20 D/G EOT CRANE	QP. NO. :	PACKAGE :-TG HALL EOT CRANES
		BHEL DRG. NO.:	CONTRACT NO.:-
		Rev. 0	
		DATE : 25.10.12	

SR. NO.	COMPONENT & OPERATIONS	CHARACTERISTIC	CLASS	TYPE OF CHECK	QUANTUM OF CHECK	REFERENCE DOCUMENT	ACCEPTANCE NORMS	FORMAT OF RECORD	D	AGENCY M	AGENCY C	AGENCY N	REMARKS
1	2	3	4	5	6	7	8	9		10			11
b)	Fillet Weld	Surface defect & size	Major	Visual	100%	Component Drawing	Component Drawing	inspection report		P	V		
				DPT	10% at random	IS:3658	Free from linear indication	inspectio n report	√	P	W	V	W: After Complete fabrication
iii)	Inspection of fabricated lifting beam	Visual & dimensional	Major	Dim ensional & measurement	100%	Individual component drawing	Individual component drawing	inspectio n report	√	P	V	V	
3)	Final assembly of Lifting Beam	Visual & Dimensional	Major	Visual & Dimensional check	100%	GA drawing of lifting beam /IS 3177 & Tech-Specification.	GA drawing of lifting beam / IS 3177 & Tech. Specification.	internal inspection report.	√	P	W	W	CHP (AT WORKS)
4)	Review of QA Documents						AS per approved QAP		√	V	V	V	
5)	Load Test at manufacturers' works as well as Site	Visual	Major	Visual	100%	Load Test Procedure	Load Test Procedure	Inspection Report	√	P	W	W	

LEGEND:

RECORDS IDENTIFIED WITH 'TICK (√) SHALL BE ESSENTIALLY INCLUDED BY CONTRACTOR IN QA DOCUMENTATION

"M" MANUFACTURER/ SUBCONTRACTOR

"C" CONTRACTOR(BHEL)

"N" CUSTOMER (NTPC)

INDICATE "P" PERFORM, "W" WITNESS AND "V" VERIFICATION AS " CHP" SHALL IDENTIFIED IN COLUMN " N "

NOTE: ITEMS NOT COVERED IN MQP, MAY BE CLEARED ON BASIS OF "CERTIFICATE OF CONFIRMANCE"

FOR CUSTOMER USE

Manufacturer/ sub-contractor	Contractor	SIGNATURE	REVIEWED BY	APPROVED BY	APPROVAL SEAL

ANNEXURE-IV A
PAINTING PROCEDURE / SCHEME

S.No	ITEM DESCRIPTION	SURFACE PREP.	PAINTING SCHEME										REMARKS
			PRIMER	No. of Coats	MIN DFT µ	INTERMEDIATE	No. of Coats	MIN DFT µ	FINISH	No. of Coats	MIN DFT µ	TOTAL DFT	
a	Structures	Shot blast cleaning/ abrasive blast cleaning to SA 21/2 (near white metal) 35-50 microns.	Inorganic ethyl zinc silicate	1	35 per coat	Epoxy based TiO2 pigmented coat	1	35 per coat	a) epoxy based paint b) final coat of Aliphatic acrylic polyurethane CDE 134, % V = 40.0(min)	2 1	25 per coat 30	150	
b	Panels	Seven Tank Process	Epoxy based polyamide cured (2) pack zinc phosphate primer %VS=58 min.	1	35 per coat	Epoxy based TIO2 pigmented polyamide cured paint (shop)	1	40	Aliphatic Acrylic (2) pack polyurethane finish paint	2	30 per coat	135	

ANNEXURE-IV B
COLOR CODING PROCEDURE / SCHEME

S.No	ITEM DESCRIPTION	REGION	SURFACE PREP.	PAINTING SCHEME							COLOUR SHADE	REMARKES
				PRIMER	MIN DFT µ	INTERMEDIATE	MIN DFT µ	FINISH	MIN DFT µ	TOTAL DFT		
		As per paint specification										
a	Crane structure	–	–	–	–	–	–	–	–	–	Lemon yellow, shade 356 as per IS-5	
b	Bottom block assembly	—	—	—	—	—	—	—	—	—	Lemon yellow, shade 356 as per IS-5	With black strip
c	Hooks	—	—	—	—	—	—	—	—	—	Lemon yellow, shade 356 as per IS-5	With 100 mm wide black zebra strip
d.	End carriage sweep	—	—	—	—	—	—	—	—	—	Lemon yellow, shade 356 as per IS-5	With black strip
e.	Panels and motors	—	—	—	—	—	—	—	—	—	Panel shade RAL 9002 for front and rear and RAL 5012 for side covers. For motors shade RAL 5012.	

ANNEXURE-V

DRAWING AND DOCUMENTS FOR SUBMISSION

S.N.	Drawings and documents	Number of prints / copies
1.0	DRAWING FOR APPROVAL	
1.1	For approval	4
1.2	For customer approval	6
1.3	For final distribution	15
2.0	DRAWING FOR REFERENCE	
2.1	For reference	4
2.2	For final distribution	15
3.0	CERTIFICATE, REPORTS ETC.	6
4.0	AS BUILD DRAWINGS (IF REQUIRED)	15
5.0	O&M MANUAL	
5.1	Draft for approval	2
5.2	For final distribution	12
6.0	QUALITY PLAN / Field quality plan / PG test	6

Note:

1.0 Soft copies shall also be submitted of all the documents.

2.0 All final drawings and documents shall also be submitted in 2 sets of CD.

		DRAWING SCHEDULE		
	2 x 660 MW MOUDA STPP- TG PACKAGE			**PART OF SPECIFICATION NO PE-TS-387-501-A001**
A	**2 NOS. 200/ 20T CAPACITY DOUBLE GIRDER TG HALL EOT CRANES IN TANDEM OPERATION**			
S.N.	**BHEL drawing No.**	**Title**	**Approval category**	**Schedule date of submission from date of LOI.**
1	PE-VO-387-501-A001	Manufacturing Quality plan including bought out items list for crane.	**A**	**15 days**
2	PE-VO-387-501-A002	Manufacturing Quality plan for lifting beam assembly	**A**	**15 days**
3	PE-VO-387-501-A101	Data sheet of 200/20 T TG Hall EOT Crane (Double Girder)	**A**	**15 days**
4	PE-VO-387-501-A102	Data sheet of motors	**A**	**25 days after approval of Mechanism Sizing Calculation in Cat II/Cat I.**
5	PE-VO-387-501-A103	Mechanism Sizing Calculation for 200/20 T TG Hall EOT cranes	**A**	**15 days**
6	PE-VO-387-501-A104	General arrangement for 200/20 T TG Hall EOT crane (Crane No.:1 & 2)	**A**	**15 days**
7	PE-VO-387-501-A105	Crab sub assembly for 200/20T TG Hall EOT crane (Crane 1 and 2)	**A**	**15 days**
8	PE-VO-387-501-A106	Gantry Rail installation for 200/20T TG Hall EOT cranes	**A**	**15 days**
9	PE-VO-387-501-A107	General arrangement for PVC shrouded conductor type DSL for 200/20T TG Hall EOT crane	**A**	**15 days**
10	PE-VO-387-501-A108	200T main hook block assembly (Crane 1 and 2)	**I**	**30 days**
11	PE-VO-387-501-A109	20 T Aux Hook Block Assembly (Crane 1 and 2)	**I**	**30 days**
12	PE-VO-387-501-A110	LT Drive wheel assembly	**I**	**30 days**
13	PE-VO-387-501-A111	LT idle wheel assembly	**I**	**30 days**
14	PE-VO-387-501-A112	CT Drive wheel assembly	**I**	**30 days**
15	PE-VO-387-501-A113	CT idle wheel assembly	**I**	**30 days**
16	PE-VO-387-501-A114	Long travel Machinery Assembly for 200/20 T TG Hall EOT crane	**I**	**30 days**
17	PE-VO-387-501-A201/1	Electrical equpment layout in cabin for 200/20 T TG Hall EOT crane No. -1	**I**	**30 days**
18	PE-VO-387-501-A201/2	Electrical equpment layout in cabin for 200/20 T TG Hall EOT crane No. -2	**I**	**30 days**
19	PE-VO-387-501-A202/1	Schematic circuit diagram of protective panel and lighting circuit for 200/20 T TG Hall crane (Crane no 1	**A**	**30 days**
20	PE-VO-387-501-A202/2	Schematic circuit diagram of Main hoist panel for 200/20 T TG Hall crane(Crane no 1 & 2)	**A**	**30 days**
21	PE-VO-387-501-A202/3	Schematic circuit diagram of Aux. hoist panel for 200/20 T TG Hall crane(Crane no 1 & 2)	**A**	**30 days**
22	PE-VO-387-501-A202/4	Schematic circuit diagram of Cross Traverse for 200/20 T TG Hall crane(Crane no 1 & 2)	**A**	**30 days**
23	PE-VO-387-501-A202/5	Schematic circuit diagram of Long Traverse panel for for 200/20 T TG Hall crane(Crane no 1 & 2)	**A**	**30 days**
24	PE-VO-387-501-A202/6	Bill of material for Main, Aux. Hoist, CT circuit, LT circuit and main (Pro) circuit for 200/20 T TG Hall (Crane-1 & 2)	**A**	**30 days**

S.N.	BHEL drawing No.	Title	Approval category	Schedule date of submission from date of LOI.
25	PE-VO-387-501-A203	G.A. of Main hoist, Aux Hoists , cross travel,long travel , protective & transformers panels for 200/20 T TG Hall crane (Crane-1 & 2)	A	30 days
26	PE-VO-387-501-A204	Cable Schedule for 200/20 T TG Hall crane	A	30 days
27	PE-VO-387-501-A205	Crane contrlol write up	I	30 days
28	PE-VO-387-501-A206	Cable size calculation for 200/20 T TG Hall crane	A	30 days
29	PE-VO-387-501-A251	Crane lubrication	I	30 days
30	PE-VO-387-501-A252	Structural calculations for 200/20 T TG Hall crane	I	15 days
31	PE-VO-387-501-A253	Type test report of motors above 50 KW. (if applicable)	I	15 days after approval of Mechanism Sizing Calculation in Cat II/Cat I.
32	PE-VO-387-501-A256	200T main hook nut and check plate	A	15 days
33	PE-VO-387-501-A257	20 T aux. hook nut and check plate	A	15 days
34	PE-VO-387-501-A212	Electrical feeder diagram	A	25 days
35	PE-VO-387-501-A213	Earthing details	I	25 days
36	PE-VO-387-501-A255	Painting Schedule	A	25 days
37	PE-VO-387-501-A115	Lifting beam assembly for 200/20 T cranes in tandem operation	A	25 days
38	PE-VO-387-501-A216	Structural calculation for 200 T Lifting beam assembly	A	25 days
39	PE-VO-387-501-A217	O & M manual	I	45 days
40	PE-VO-387-501-A254	Mandatory Spares list	A	30 days
	NOTE			
1	ALL RESUBMISSIONS SHALL BE MADE WITHIN 10 DAYS OF RECEIVING COMMENTS FROM BHEL /CUSTOMER.			
2	DRAWINGS SHALL BE COMMENTED/APPROVED BY BHEL /CUSTOMER WITHIN 20 DAYS FROM SUBMISSION.			
3	INCOMPLETE DRAWINGS/DOCUMENTS SHALL NOT BE TREATED AS SUBMITTED.			
4	LEGENDS			
	A= Approval category			
	I= Information category			

PRODUCED BY AN AUTODESK EDUCATIONAL PRODUCT

ALL DIMENSIONS ARE IN MM / NOT WHILE PRODUCTION

CUSTOMER'S DRAWING NO.

DRAWING NO.

COPY RIGHT AND CONFIDENTIAL
The information on this document is the property of BHARAT HEAVY ELECTRICALS LIMITED
It must not be used directly or indirectly in any way detrimental to the interest of the company.

COMPUTER FILE NAME : TAL5

NTPC DRG NO	
OWNER	NTPC LTD
STATUS CONTRACT DRG./REF. NO. (INTERNAL)	MOUDA SUPER THERMAL POWER PLANT (2 X 660 MW)
PRINT SCALE	BHARAT HEAVY ELECTRICALS LTD POWER SECTOR PROJECT ENGINEERING MANAGEMENT NEW DELHI
SUB-CONTRACTOR	
TITLE	

DEPT CODE		NAME	SIGN	DATE
	DRN			
	DESN			
	CHD			
	APPD			

REV.	DATE	ALTD	CHD	APPD	REV.	DATE	ALTD	CHD	APPD

DEPT. SCALE
SIGN
DATE

BHEL DRG NO :

SHEET 1 OF 1 REV

SIZE-A2

PRODUCED BY AN AUTODESK EDUCATIONAL PRODUCT

	MANUFACTURER'S NAME & ADDRESS			**MANUFACTURING QUALITY PLAN**				PROJECT : 2 X 660 MW MOUDA TPP STAGE II					
								PACKAGE : DOUBLE GIRDER CRANES					
				ITEM:		QP NO : PE-TS-387-501-A001		CONTRACT NO :					
						REV : 0		CONTRACTOR :					
						DATE : 18.06.13		VENDOR' S QAP No :					
SL. NO.	COMPONENTS & OPERATION		CHARACTERISTCS	CLASS	TYPE PF CHECK	QUANTUM OF CHECK	REFERENCE DOCUMENT	ACCEPTANCE NORMS	FORMAT OF RECORDS		AGENCY M	C	N	REMARKS
1	4		3	4	5	6	7	8	9	D*	**	10		11
1	Fabricated components													
	Box Girder, End Carriage, Crab Frame, Rope Drum													
a	Material		Chemical & Physical Properties	Major	Corelation	1/Heat/Batch	IS:2062-Gr B	IS:2062-Gr B	Mfr's T.C/	√	P	V	V	
					with T.C.				Vendor's					
					Check test in				T.C.					Refer note: 1
					absence of T.C.									
			U.T of plates.		Ultransonic	100%	ASTM A435	ASTM A435	T.C. / I.R.	√	P	V	V	U.T. ON ABOVE 25MM THICK PLATE
b	weld setup		dimensions	Major	Measurement	100%	Components drawings	Components drawings	Vendor's		P			
									inspection					
									report					
1A	Seamless pipe for rope drum		Chem,physical,	major	Co relation with TC, check in absence of TC	100%	ASTM A106Gr B	ASTM A106Gr B	MTC/Lab TC	√	P	V	V	Refer note: 1
			NDT	Major	,macro etching & flattening	100%	ASTM A106Gr B	ASTM A106Gr B	MTC/Lab TC	√	P	V	V	
			NDT	Major	UT	100%	ASTM E-213-2007	notch depth shall not be more than 12.5% of thickness of pipe	IR	√	P	V	V	
2	Welding WPS (Welding procedure specification) in line with ASME sec. IX (QW - 482) - For Box Girder, End Carriage, Crab Frame, Rope Drum													
a	Check for welding		Welding parameters	Major	check & test	100%	ASME Sec-IX	ASME Sec-IX	QW-482,QW-483	√	P	V	V	NTPC APPROVED WPS AND NTPC /LLOYD QUALIFIED WELDERS ACCEPTABLE.
	procedure qulification,								QW-484 ASPER					
	welder's performance								asme Sec-IX					
b	Back chipping		surface defect	Major	DPT	100%	ASME Sec-VIII,	ASME Sec-VIII,	Vendor insp.		P	V	V	
							Div-I, Appen - 8	Div-I, Appen - 8	Report					
c	Butt Welds		NDT	Critical	Gamma ray	100% in tension	ASME Sec - VIII	ASME Sec-VIII, CL UW51	Vendor insp	√	P	V	V	Review of inspection report & radiography

	MANUFACTURER'S NAME & ADDRESS			**MANUFACTURING QUALITY PLAN**				PROJECT : 2 X 660 MW MOUDA TPP STAGE II						
								PACKAGE : DOUBLE GIRDER CRANES						
				ITEM:		QP NO : PE-TS-387-501-A001		CONTRACT NO :						
						REV : 0		CONTRACTOR :						
						DATE : 18.06.13		VENDOR' S QAP No :						
SL. NO.	COMPONENTS & OPERATION		CHARACTERISTCS	CLASS	TYPE PF CHECK	QUANTUM OF CHECK	REFERENCE DOCUMENT	ACCEPTANCE NORMS	FORMAT OF RECORDS		AGENCY M	C	N	REMARKS
1	4		3	4	5	6	7	8	9	D*	** 10			11
					Radiography	25% in compression			Repot					report and RT flims . Refer note: 2
						100% in rope drum			RT film					
				Critical	DPT	100%	IS: 3658	ASME Sec-VII, Appen - 8	Vendor insp		P	W	V	DP test of filletweld for ropedrum to be conducted after final machining
									Repot					
														Random witness by BHEL
d	fillet welds		Size and surface defects	Major	Visual	100%	Component Drg.	Component Drg.	Vender insp.		P	V	V	
									Report					
				Major	DPT	10% RANDOM	ASME Sec VIII-Div1-Append 8	ASME Sec VIII-Div1-Append 8	Vender insp.	√	P	W	V	
									Report					
e	final insection of fabricated components listed in Sr.1 above		Dimensions for Girder, end	Major	Dimensional	100%	Vendor Mfg. Drg.	Vendor Mfg. Drg.	vendor route		P	V	V	
			carriage rope drum etc.		Measurement				card/vendor					
			Camber, Verticality, bend						insp report					
			etc											
f	Heat treatment of rope drum		Stress relieving	Major	Review of SR	100%	ASME Sec-VIII, Div - I	ASME Sec-VIII, Div - I	SR Chart	√	P	V	V	If fabricated from M.S Plate
					chart									
3	Gear box casing													
a	Material		Surface condition	Major	Visual	100%	Componet Drg.	Componet Drg.	Vendor insp		P			Refer note 1
									Report					
			Chemical & mech	Major	Measurement	100%	Componet Drg.	Componet Drg.	T.C. & I.R.	√	P	V	V	
					Correlation with	100%	IS:2062	IS:2062						
					T.C. Check test									
					in absesnce of T.C.									
					Correlation									

	MANUFACTURER'S NAME & ADDRESS			MANUFACTURING QUALITY PLAN				PROJECT : 2 X 660 MW MOUDA TPP STAGE II					
								PACKAGE : DOUBLE GIRDER CRANES					
				ITEM:		QP NO : PE-TS-387-501-A001		CONTRACT NO :					
						REV : 0		CONTRACTOR :					
						DATE : 18.06.13		VENDOR' S QAP No :					
SL. NO.	COMPONENTS & OPERATION	CHARACTERISTCS	CLASS	TYPE PF CHECK	QUANTUM OF CHECK	REFERENCE DOCUMENT	ACCEPTANCE NORMS	FORMAT OF RECORDS		AGENCY M	C	N	REMARKS
1	4	3	4	5	6	7	8	9	D*	** 10			11
b	welding	Welding & Dimensional conformity	Major	Measurement	100%	Componet Drg.	Componet Drg.	Vendor insp Report		P			
c	Heat treatment	stress relieving	Major	Review of SR chart	100%	Component Drg./ ASME Sec-VIII, Div - I	Component Drg./ ASME Sec-VIII, Div - I for procedure.	Vendor insp Report	√	P	V	V	
4	PLATFORMS	Dimensional conformity	Minor	Measurement	100%	Components Drg.	Components Drg.	Vendor insp Report		P			Refer note: 1
5	L.T.FRAMES	Dimensional conformity	Minor	Measurement	100%	Components Drg.	Components Drg.	Vendor insp Report		P			
6	HAND RAILINGS	Dimensional conformity	Minor	Measurement	100%	Components Drg.	Components Drg.	Vendor insp Report		P			
7	CABIN	Dimensional conformity	Minor	Measurement	100%	Components Drg.	Components Drg.	Vendor insp Report		P	V		
8	Current collerctor arms	Dimensional conformity	Minor	Measurement	100%	Mfr. Catalog	Mfr. Catalog	Vendor insp Report		P			
9	DSL Guard	Dimensional conformity	Minor	Measurement	100%	Components Drg.	Components Drg.	Vendor insp Report		P			
10	Rails	Dimensional conformity,	Minor	Measurement	100%	G.A.drg./IS : 3443 Vendore T.C./Appd.Data Sheet	G.A.drg./IS : 3443 Vendor T.C./Appd.Data Sheet	IR	√	P	V	V	
		Chemical , tensile & hardness	Major	Chemical & hardness	100%	IS-3443	IS:3443	IR	√	P	V	V	
11	MECHANICAL COMPONENTS												
A	a) wheels												

	MANUFACTURER'S NAME & ADDRESS			**MANUFACTURING QUALITY PLAN**				PROJECT : 2 X 660 MW MOUDA TPP STAGE II					
								PACKAGE : DOUBLE GIRDER CRANES					
				ITEM:		QP NO : PE-TS-387-501-A001		CONTRACT NO :					
						REV : 0		CONTRACTOR :					
						DATE : 18.06.13		VENDOR' S QAP No :					
SL. NO.	COMPONENTS & OPERATION	CHARACTERISTCS	CLASS	TYPE PF CHECK	QUANTUM OF CHECK	REFERENCE DOCUMENT	ACCEPTANCE NORMS	FORMAT OF RECORDS		AGENCY M	C	N	REMARKS
1	4	3	4	5	6	7	8	9	D*	** 10			11
	i) raw material	Chemicals composition and	Major	Corelation with	100%	Mfg.drg./IS:1570	Mfg.drg./IS:1570	Test	√	P	V	V	Refer Note:1
		Mechanical Proporties.		mfr's TC		/ BS - 970	/ BS - 970	Certificate					
	ii) Machined	a) Dimensions	Major	Measurement	100%	Component Drawing	Component Drawing	Vendor insp.		P	V	V	
		b) Hardness		Mechanical	100%	Approved Data Sheet / Mfg. Drg.	Approved Data Sheet / Mfg. Drg.	Report	√	P	V	V	
		c) UT		NDT	100%	Refer Note : 6	Refer Note 6		√	P	V	V	
		d) DPT		NDT	100%	8	App-8		√	P	W	V	
	b) Raw material for Gears ,	i) Chemicals Composition	Major	Correlation with	100%	Component Drawing,	Component Drawing,	Vendor insp.	√	P	V	V	
	Pinions, Shafts,Axles etc	& heat treatment, Physical		mfr's TC		BS : 970 / IS : 1570	BS : 970 / IS : 1570	Report					
		Properties.		Check test in		Approved Data Sheet	Approved Data Sheet						
				absence of TC									
		ii) UT (after proof machining)	Major	check for UT	100%	ASME Sec-V	Refer Note 6	Vendor insp.	√	P	V	V	Hardness witnessing by BHEL before teeth cutting.
				(above 50mm dia)				Report					
		iii) Hardness	Major	check for	100%	Mfg. drg. &	Mfg. drg. &	Vendor insp.	√	P	W	V	
				Hardness		Approved Data	Approved Data	Report					
		iv) Dimensions	Major	Measurement	100%	Component Drawing	Component Drawing	Vendor insp.	√	P	V	V	
								Report					
		V) D.P.Test on teeth	Major	NDT	100%	ASTME-165	No Crack and line of	Vendor insp.	√	P	V	V	
							indication	Report					
B	Pulleys, Brake drums, coupling & other major steel castings & forging												
	i) Materials	Physical/Chemical/Hardness	Major	Corelation with	100%	Components Drawing	Components Drawing	Mfr's T.C.	√	P	V	V	
				mfr's TC									
	ii) Machined	a) Dimensions	Major	Measurement	100%	Components Drawing	Components Drawing	Vendor insp		P	V	V	
								report					
		b) DPT after	Major	NDT	100%	ASTM E-165	No. crack /Liner	Vendor insp.	√	P	V	V	
		machining.					indication	Report					
C	Gear box assy & idle running	Check for oil leakage,Noise level,vibration	Major	Visual &	100%	Vendor standard	Smooth running no	Vendor insp.	√	P	V	V	

	MANUFACTURER'S NAME & ADDRESS			MANUFACTURING QUALITY PLAN				PROJECT : 2 X 660 MW MOUDA TPP STAGE II					
								PACKAGE : DOUBLE GIRDER CRANES					
				ITEM:		QP NO : PE-TS-387-501-A001		CONTRACT NO :					
						REV : 0		CONTRACTOR :					
						DATE : 18.06.13		VENDOR' S QAP No :					
SL. NO.	COMPONENTS & OPERATION	CHARACTERISTCS	CLASS	TYPE PF CHECK	QUANTUM OF CHECK	REFERENCE DOCUMENT	ACCEPTANCE NORMS	FORMAT OF RECORDS		AGENCY M	C	N	REMARKS
1	4	3	4	5	6	7	8	9	D*	**	10		11
		backlash, rise in temp. after 2		Measurement			oil leakage, Noise	Report					
		Hrs. of running.					85 db at 1 Mtr.						
		reduction ration, backlash and contact pattern					Max. Temp. rise						
							40°C above amb						
D	a) Top block, bottom block	dimensional conformity	Major	Masurement	100%	Assembly drawing	Assembly drawing	Vendor insp.		P	V	V	
								Report					
	b) Hook	i) Chemical composition, Heat treatment,	Major	Chemical, heat treatment &	100%	IS:1875		Test Certifacte , HT chart & Insp. Report	√	P	V	V	
		Mechanical properties on integeral		Tensile , % elongation									
		test bar											
		ii) UT on raw material of hook	Major	UT	100%	ASME sec--v	Annex-1 (Attached)		√	P	V	V	
		iii) Forging operation of hook	Major	Visual	100%	IS:5749 /IS:15560	IS:5749 /IS:15560		√	P	V	V	
		iv) Proof load test	Major	Mechanical	100%	IS:5749 /IS:15560	IS:5749 /IS:15560		√	P	W	W	
		v) UT & MPI after proof load test	Major	UT & MPI	100%	ASME sec - v	Annex-1 for UT &		√	P	W	W	
							No crack & linear						
							indication (For MPI)						
E	Rope drum assembly	Diemnsional conformity	Major	Measurement	100%	Component Drawing	Tolerance as per drg	Vendor insp		P	V	V	
								Report					
12	Electrical components												
a)	Motors (=< 50 KW)	make , type , rating, Routine test	Major	Review mfr's TC	100%	IS:325	IS 325/Mfr's T.C.	Mfr's T.C.	√	P	V	V	Refer Note 3.
													For Motor above 50kW separate QP shall be folowed
b)	Brakes	Make , t ype , rating , dia , IR, HV , Functional test /Routine test	Major	Review mfr's TC	100%	Appd drgs	Appd drgs	Mfr's T.C.	√	P	V	V	

	MANUFACTURER'S NAME & ADDRESS			MANUFACTURING QUALITY PLAN				PROJECT : 2 X 660 MW MOUDA TPP STAGE II					
								PACKAGE : DOUBLE GIRDER CRANES					
				ITEM:		QP NO : PE-TS-387-501-A001		CONTRACT NO :					
						REV : 0		CONTRACTOR :					
						DATE : 18.06.13		VENDOR' S QAP No :					
SL. NO.	COMPONENTS & OPERATION	CHARACTERISTCS	CLASS	TYPE PF CHECK	QUANTUM OF CHECK	REFERENCE DOCUMENT	ACCEPTANCE NORMS	FORMAT OF RECORDS		AGENCY M	C	N	REMARKS
1	4	3	4	5	6	7	8	9	D*	** 10			11
c)	Control panel	Interlocking fuctional, IR,	CR	Test for HV	100%	Relevant drg &	Relevant drg. & IS : 3177 /	Vendrs insp	√	P	W	W	Refer Note No. 4
		HV, Sheet thikness, cable laying, dressing , ferulling		functional &		Generally confirm to	App. Panle Drg. & BOM	Report					VFD Test Certificate to be
		Overall diemsnions , painting		routine check		IS : 3177 / App. Panle Drg. &							submitted from app. Vendor
		shade, Panel surface finish,				BOM							for verification.
		Thickness, adhesive test,											
		Component fixing, Degree of											
		protection by paper inserting											
		method											
d)	Radio remote, Master controller	HV, IR,Functional	Major	Verfication	100%	BOM/ Mfr. Catalog	BOM/ Mfr. Catalog	Mfr's T.C.	√	P	V	V	Refer Note No. 4
	Pendent , switches												
e)	Limit switches	HV, IR & Functional	Major	Verfication	100%	Approved drawings	Approved drawings	Mfr's T.C.	√	P	V	V	
f)	Trailing cable, Power	Make , type , rating ,Routine & aceptance test	Major	Verfication	100%	,IS: 9968	,IS: 9968	Mfr's T.C.	√	P	V	V	
	Control Cable & DSL	insulation resistance values			100%	IS 1554-Part-1	IS 1554-Part-1						
g)	Transformer	make rating , routine test	Major	visual	100%	Appd drg	Appd drg	IR		P	V	V	
h)	SFU, MCCB,MCB, Contactors, DSL, relays, fuses, resitance bank	make, t ype , rating size, functional, continuity check	Major	visual	100%	Appd drg	Appd drg	IR		P	V	V	
i)	VVVF drives	make , type , rating, routine test	Major	visual	100%	Appd drg	Appd drg	IR		P	V	V	
j)	Anti collision devices , cable gland , ,lugs ,r ectifier, indicating lamps, terminal blocks, load cell.	make , type	Major	visual	100%	Appd drg	Appd drg	IR		P	V	V	
13	Bought our items												
a)	Wire rope	Visual , tensile	Major	Type, grade, dia	100%	IS:2266	IS:2266	T.C.	√	P	V	V	
				breaking strenth									
b)	Other Items	Dimensional conformity	Major	Review TC	100%	Relevant Drg.	Relevant Drg.	Vendor		P	V	V	
								Confirmation					
c)	Bearing	Type & Size	Major	Verfication		Appd drg/Mfr'scatalogue	Appd drg/Mfr's catalogue		√	P	V	V	

	MANUFACTURER'S NAME & ADDRESS			**MANUFACTURING QUALITY PLAN**				PROJECT : 2 X 660 MW MOUDA TPP STAGE II					
								PACKAGE : DOUBLE GIRDER CRANES					
				ITEM:		QP NO : PE-TS-387-501-A001		CONTRACT NO :					
						REV : 0		CONTRACTOR :					
						DATE : 18.06.13		VENDOR' S QAP No :					
SL. NO.	COMPONENTS & OPERATION	CHARACTERISTCS	CLASS	TYPE PF CHECK	QUANTUM OF CHECK	REFERENCE DOCUMENT	ACCEPTANCE NORMS	FORMAT OF RECORDS		AGENCY M	C	N	REMARKS
1	4	3	4	5	6	7	8	9	D*	** 10			11
14	Assembly of cranes												
a)	Bridge with LT	Dimesions, wheel level alignment	Major	Measurement	100%	GA drg/IS:3177	GA drg/IS:3177	Vendor insp. report	√	P	W	V	
b)	Crab assembly	Dimesions, wheel level alignment	Major	Measurement/ Visual	100%	GA drg/IS:3177	GA drg/IS:3177	Vendor insp. report	√	P	W	V	
c)	Final Inspection (at works)	Overall dimension: Span, Diagonal dimension	Major	Measurement	100%	Approved drgs./IS :3177	Approved drgs./IS: 3177	Vendor insp.	√	P	W	W	

	MANUFACTURER'S NAME & ADDRESS			**MANUFACTURING QUALITY PLAN**				PROJECT : 2 X 660 MW MOUDA TPP STAGE II					
								PACKAGE : DOUBLE GIRDER CRANES					
				ITEM:		QP NO : PE-TS-387-501-A001		CONTRACT NO :					
						REV : 0		CONTRACTOR :					
						DATE : 18.06.13		VENDOR' S QAP No :					
SL. NO.	COMPONENTS & OPERATION		CHARACTERISTCS	CLASS	TYPE PF CHECK	QUANTUM OF CHECK	REFERENCE DOCUMENT	ACCEPTANCE NORMS	FORMAT OF RECORDS		AGENCY M	C	N	REMARKS
1	4		3	4	5	6	7	8	9	D*	** 10			11
	with actual panel, RRC and pendent		check, headroom, lift , Eqp. Layout on bridge platform, No Load running of LT machinery						report					
			No Load & Load Tests											
			a) No load: Hoists,CT,LT speed	Major	Measurement	100%	Approved drgs	Approved drgs	Vendor insp.	√	P	W	W	
			& current measurement..						report					
			b) SWL: Hoists, CT speed, current	Major		100%	GA drg/IS:3177	GA drg/IS:3177	Vendor crane test		P	W	W	
			& Deflection measurement				Tech. Specification	Tech. Specification	report					
			c) Overload: Hoisting, CT movement & current measurment	Major	Operational		GA drg/IS:3177	GA drg/IS:3177	Vendor crane test	√	P	W	W	
			(at 125% SWL)		Check		Tech. Specification	Tech. Specification	report					
			d) Operation check of brakes and limit switches .											
d)	Lifting beam (for tandem operation) at works		Dimension, Visual and load test	Major	measurement, check	100%	Approved drgs/doc	Approved drgs/doc	IR	√	P	W	W	
15	Review of QA documentation							As per approved QAP			V	V	V	
16	Cleaning and Painting		Surface preparetion &	Major	Visual		Approved drgs/doc	Approved drgs/doc	Vendor's		P	V		
			Painting						Report					
	Note 1 :	Original TCs / Photocopies certified in original by mill shall be furnished for review. Test In absence of correlated TCs Check test shall be carried out from each plate/ bar for above 10 mm thk., certificates shall be offered for review at the time of stage inspection of components / assembly. Supplier shall ensure that pitted material is not used.												
	Note 2 :	X-Ray to be taken for thickness upto 19 mm and Gamma Ray for thickness above 19 mm. If Gamma Ray is used for lower thickness slow speed film like D2 or equvalent which gives enough readable and interpretable film quality to be used for clarity. All NDT shall be carried out by Qualified Level II personnel.												
	Note 3 :	LESS THAN 30KW: ACCEPTANCE OF MOTOR LESS THAN 30 KW IS BASED ON COC OF THE MANUFACTURER & THE CONTRACTOR CONFIRMING AS FOLLOWS: IT IS HEREBY CONFIRMED THAT THE ABOVE MENTIONED MOTOR /MOTORS WAS/ WERE MANUFACTURED TAKING CARE OF NTPC SPECIFIC REQUIREMENTS REGARDING AMBIENT TEMP., VOLTAGE & FREQUENCY VARIATION, HOT STARTS, PULL OUT TORQUE, STARTING KVA/KW, TEMP. RISE, DISTANCE BETWEEN CENTRE OF STUD & GLAND PLATE AND TESTED IN ACCORDANCE WITH APPROVED DRAWING /DATA SHEETS.												
		30 KW to 50kW : ACCEPTANCE OF MOTOR RATING BETWEEN 30 KW & 50 KW IS BASED ON NTPC REVIEW OF ROUTINE TEST INSPECTION REPORT AS PER IS 325 ALONG WITH COC OF THE MANUFACTURER & THE CONTRACTOR CONFIRMING AS FOLLOWS: IT IS HEREBY CONFIRMED THAT THE ABOVE MENTIONED MOTOR /MOTORS WAS/ WERE MANUFACTURED TAKING CARE OF NTPC SPECIFIC REQUIREMENTS REGARDING AMBIENT TEMP., VOLTAGE & FREQUENCY VARIATION, HOT STARTS, PULL OUT TORQUE, STARTING KVA/KW, TEMP. RISE, DISTANCE BETWEEN CENTRE OF STUD & GLAND PLATE, SPACE HEATER AND TESTED IN ACCORDANCE WITH APPROVED DRAWING /DATA SHEETS.												

	MANUFACTURER'S NAME & ADDRESS			**MANUFACTURING QUALITY PLAN**				PROJECT : 2 X 660 MW MOUDA TPP STAGE II					
								PACKAGE : DOUBLE GIRDER CRANES					
				ITEM:		QP NO : PE-TS-387-501-A001		CONTRACT NO :					
						REV : 0		CONTRACTOR :					
						DATE : 18.06.13		VENDOR' S QAP No :					
SL. NO.	COMPONENTS & OPERATION	CHARACTERISTCS	CLASS	TYPE PF CHECK	QUANTUM OF CHECK	REFERENCE DOCUMENT	ACCEPTANCE NORMS	FORMAT OF RECORDS		AGENCY M	C	N	REMARKS
1	4	3	4	5	6	7	8	9	D*	** 10			11
Note 4 :	Performance of electrical & control devices along with the interlocks, protection & sequence to be checked during crane assembly and parked at works.												
Note 5 :	Acceptance norms for UT (Normal probe to be used of not less than 2 MHz frequency) : Following defects are not acceptable:/ Vendor's UT Procedure approved by BHEL may also be used. (i) Cracks, flakes, seams and laps (ii) Defects giving indications larger than 6 mm diameter equivalent flaw. (iii) Groups of defects with maximum indication less than that from a 6 mm diameter equivalent flaw which cannot be separated at testing sensitivity if the back echo is reduced to less than 40%. (iv) Defects giving indications of 3 to 6 mm diameter equivalent flaw separated by a distance less than four time the length of the larger of the adjacent flaws												
Note 6 :	Acceptance norms for UT (Normal probe to be used of not less than 2 MHz frequency) : Following defects are not acceptable:/ Vendor's UT Procedure approved by BHEL may also be used. (i) Cracks, flakes, seams and laps (ii) Defects giving indications larger than 4 mm diameter equivalent flaw. (iii) Groups of defects with maximum indication less than that from a 4 mm diameter equivalent flaw which cannot be separated at testing sensitivity if the back echo is reduced to less than 50%. (iv) Defects giving indications of 2 to 4 mm diameter equivalent flaw separated by a distance less than four time the size of the larger of the adjacent flaws For hooks, for carrying out UT on the areas where there is loss of back wall echo due to geometry, the calibration shall be done on blocks of same material of												
Note 7 :	All material of construction shall be as per approved drg. / data sheet / specifications												
		LEGEND :											
		D * RECORDS INDETIFIED WITH 'TICK'(√) SHALL BE ESSENTIALLY											
		INCLUDED BY CONTRACTOR IN QA DOCUMENTATION											
		** M : MANUFACTURER/SUBCONTRACTOR											
MANAFACTURER/	CONTRACTOR	C: BHEL-CQS/THIRD PARTY											
SUBCONTRACTOR		INDICATE "P" PERFORM "W" WITNESS AND "V" DOCUMENT REVIEW											
SIGNATURE		N : CUSTOMER/NTPC					REVIEWED BY	NAME & SIGN OF APPROVING AUTHORITY & SEAL					

1.0 General

a) This part of the specification describes the general requirements for the Variable Voltage Variable frequency Drives, herein referred to as AC Drives, for use with standard IEC design AC squirrel cage induction motors. The nominal values, the standard documents and the drive's minimum performance are defined in this part. **To avoid any mismatch between the motor and its control equipment, the AC Drive shall be capable of auto adjustment by automatic measurement of the motor parameters with/without motor rotation.**

b) Inverter construction and related devices :

Construction shall be divided in 3 broad sections. Section One converts AC Supply into DC supply. Section 2 Converts and controls DC supply into AC Supply with regulation. Section 3 shall be used for braking action of the motor and Dynamic Braking Unit (DBU) can be inbuilt or external depending upon the drive capacity. VVVF can be used in open loop (without external speed feed back) like in Travel motions or close loop (With external speed feed back) like in Hoist motions. Chokes on input supply side are generally used in crane application for power regulation. Like all other electronic / electric devices VVVF drives are also protected by MCB / MCCB / Fuses. VVVF drives are sensitive to temperature and hence drive internal as well as external cooling fans are provided.

c) Programming of VVVF Drives.

VVVF drives shall be programmable and for that purpose detachable digital Operator display unit shall be supplied along with the VVVF having required buttons for setting the user constant, functions etc. The VVVF drive is to be fine tuned by matching the motor parameters and setting the parameters on full load.

d) VVVF drives shall be connected with power supply and these drives generate their own low voltage control supply. Potential free contacts shall be connected to this control supply and few programmable control terminals. Starting / stopping / set speeds operations of VVVF drive shall be achieved by above control connection.

e) VVVF shall give smooth control over acceleration and deceleration making the motion jerk free and using Variable voltage variable frequency limits the inrush current to the squirrel cage motors. VVVF provides controlled torque to the motor due to which crane operations are jerk free.

1.1 Experience

The Frequency Converter Manufacturer shall have adequate experience in frequency converter manufacturing and have adequate business volume in order to provide credibility in his commitments and a capability of long term support.

1.2 Local support

The Supplier shall have a permanent representative office with a trained and skilled support staff, in the country where the goods are delivered, in order to prove his commitment for local support and to provide a channel for communication.

The engineers employed by the Supplier's regional office shall be certified by the Manufacturer and provide start-up service including physical inspection of the drive, connected wiring and final adjustments, to ensure that the AC Drive meets the required performance.

The Supplier shall be able to give basic drives training to the Customer's engineers, preferably on the site. The training shall, as a minimum, include system concepts and basic troubleshooting.

2.0 Basic requirements for the AC Drives

2.1 General requirements

The AC Drive shall comply with National(country of origin) and International standards and the recommendations for electrical industrial control devices (IEC, EN, UL, NFC, VDE).

The AC Drive shall be of the most modern design, yet user friendly and be simple to install, commission and maintain. The AC Drive shall be able to start and control the speed of a standard squirrel cage induction AC motor. The AC Drives shall be : CE marked, conforming to European Low Voltage (73/23/CEE and 93/68/CEE) and EMC (89/336/CEE) Directives, UL/CSA marked according to UL 508C.

The AC Drives have to be built to comply with the IEC standards.

The AC Drive shall be a digitally controlled drive, using, at least, the Pulse Width Modulation (PWM) with flux vector control closed loop. It shall have diodes / thyristors in rectifier and IGBT's in the inverter section in their entire power range, and it shall have the following minimum specifications.

Rated Input Voltages	380V -15% 480V +10%, three-phase
Rated Input Frequency	50Hz +/- 5%
Output Voltage	0 – Input voltage, three-phase
Output Frequency Range	0 to 400 Hz
Acceleration / Deceleration Time	0.01 – 999s, adjustable, linear, with S, with U or customised shapes
Overload capability (Constant Torque)	150% of nominal current for 1min.

Operating ambient Temperature	-10°C up to 50°C(shall be derated suitably if not rated at 50°C)
Storage ambient Temperature	-25°C up to 70 °C
Maximum operating altitude	1000 m without de-rating, 1000…3000 (shall be de-rated suitably)
Max. Relative Humidity	95 %, without condensation and dripping water.
Main Protections	Over current, short circuit between phase, short circuit between phase and ground, input phase loss, output phase loss, motor overload, over speed, over voltage, under voltage, drive over temperature

The AC Drive shall be able to give a 100 % output current continuously in the above specified conditions. In order to ensure that the drive can provide the required output current in the specified ambient conditions, the Manufacturer shall inform the required derating, if the ambient temperature given in the project-specific specification is higher than rated ambient of the drive or if the installation altitude is more than 1000 m above the sea level. The de-rating factor shall be specified so that neither the lifetime of the AC Drive nor the unit's performance, overload capability included, nor the reliability of the AC Drive shall suffer.

The VVVF drives shall have all necessary protections i.e input phase loss, earth fault, over voltage, output short circuit, load loss , input transient protection, overload etc

Suitable encoder shall be provided for all motions.

3.0 User interface

3.1 General

The user interface shall be identical throughout the power range and type to avoid confusion amongst the users and need for training in several different units.

3.2 Inputs and outputs

A. At least, the following standard Inputs and Outputs shall be provided, to be used in interface with the control system:

Analogue Inputs : 1 x Programmable differential voltage input ± 10V,
1 x Programmable current input 0(4) - 20mA
1 x Programmable voltage input 0 – 10V

Analogue Output : 1 x Programmable analogue outputs 0(4) - 20mA or 0 – 10V

Logic inputs : 6 x Programmable logic Inputs isolated from the mains

Relay Outputs : 2 x Programmable Digital outputs with a changeover dry contact

All the control terminals shall be clearly marked.

B. At least, it shall be possible to assigned the following functions to the I/Os:

Analogue input	**Analogue outputs**
Speed reference Summing reference	Motor current Motor frequency Motor torque Motor power
Logic input	**Relay or logic outputs (open collector)**
Forward Reverse Jog Preset speeds Reference switching Ramp switching Parameter sets selection Fast stop Freewheel stop + speed - speed External fault	Ready Drive running High speed attained Drive fault Frequency threshold attained Motor thermal state attained Torque or current limitation attained Brake control

3.4 Programming terminal

A. The AC drive shall have a keypad /display for programming and controlling purposes. An IP54 or IP65 remote mounting shall be possible at a distance of 10m.

B. Password protection shall be provided to avoid unauthorized tampering with the set parameters.

C. The programming terminal shall be able to display the commercial reference of the AC drive and of the options, the software version, the serial number

D. Direct keypad entry shall be provided to observe the following actual parameters. Any one of the following parameters or actual values shall be selected to be always displayed :-

i) Input Voltage
ii) Input Frequency
iii) Output Frequency
iv) Output Power

v) Output Current
vi) Motor Speed

The following parameters shall always be displayed during normal operation :-
i) Drive Status

The following drive control functions at least shall be available from the keypad :-
i) Run
ii) Stop
iii) Local / Remote selection.
iv) Forward/Reverse (if function enabled)
v) Accelerate
vi) Decelerate
vii) Parameter setting

3.5 Application programming

The AC Drive shall be designed for both simple and the most complicated applications, yet it shall be user friendly. It shall be possible to reset the parameter settings back to the original factory settings through the keypad.

3.6 PC Tools

The AC Drive Supplier shall have a Windows based PC software available for monitoring and controlling the AC Drives, and the software shall be offered as an option. The software shall be supplied with the necessary hardware and a provision for connecting a PC with the AC Drives. It shall be possible to set and modify parameters, control the drive, read actual values and make trend analysis using the software.

4.0 Software features

A. Restart

In the event of a fault trip due to over voltage, over current or loss of analogue signal, the AC DRIVE shall be programmable to attempt an automatic restart. For safety reasons, the maximum number of attempts shall be within a selectable time. If the fault does not clear after the attempts, the drive shall lock out.

B. Brake logic control
The AC Drive shall have a built-in function to control a mechanical brake in order to move the load in a smooth and safe way. The brake logic control shall be adapted to the different movements : hoisting, travel, orientation.

5.0 Preferred makes:

Schneider Electric, L&T-YASKAWA, Siemens, ABB.

DOUBLE GIRDER EOT CRANE

1.0.0 SCOPE

This specification covers the design, material, manufacture, assembly, inspection and testing at manufacturer works for EOT cranes and shall be applicable unless the requirements are addressed otherwise in BHEL / BHEL's Customer approved documents.

2.0.0 CODES AND STANDARDS

The equipment to be supplied under this specification shall conform to the following codes and standards (latest revisions) unless otherwise specified hereinafter.

i)	IS 807: 1976	Codes of Practice for Design, Manufacture, Erection and Testing (Structural Portion) of cranes and hoists
ii)	IS: 3177 (1999)	Code of Practice for Design of Overhead Travelling Cranes and Gantry Cranes other than steel work cranes.
iii)	IS: 2266	Specification for steel wire ropes for general Engineering purposes.
iv)	IS: 4029	Guide for testing induction motor (for temperature rise).
v)	IS: 15560	Steel hooks for standard shank design.
vi)	IS: 3443	Specification for crane rail section.
vii)	IS: 325	Three phase induction motors.
viii)	IS: 900	Code of practice for installation and maintenance of induction motors.
ix)	IS: 4237	General requirement of switchgear and Control gear for voltage not exceeding 1000 V.
x)	IS: 434 (Part I)	Copper conductors rubber insulated cables for voltage up to 1000V.
xi)	IS 1596	Polyethylene insulated PVC sheathed cables
xii)	IS 3043	Code of practice Earthing

xiii)	IS: 3938	Electric Wire Rope Hoists.
xiv)	IS: 2147	Degree of protection provided by enclosures for Low voltage switchgear and control gear.
xv)	IS: 1554 Part I	PVC insulated (Heavy-duty) electric cables for working voltages up to and including 1100 volts.
xvi)	IS: 691	Flexible trailing cables rubber insulated.
xvii)	IS: 1653	Steel conduits for general engineering purposes.
xviii)	IS: 2509	Rigid non-metallic conduit for electric - Installations
xix)	IS: 2062	Steel for General Engineering purposes.
xx)	IS: 1030	Carbon Steel castings for general engineering purposes.
xxi)	IS: 1570	Schedules for Wrought steels.
xxii)	IS: 1875	Carbon steel billets, blooms, slabs and bars for forgings.
xxiii)	IS: 808	Dimensions for hot rolled steel beam, column, channel and angle sections.
xxiv)	IS: 1852	Rolling and cutting tolerances for Hot rolled steel products.
xxv)	IS: 2291	Tangential Keys and Keyways.
xxvi)	IS: 2292	Taper Keys and Keyways.
xxvii)	IS: 3961	Recommended current rating for cables.
xxviii)	IS: 694	PVC insulated cables for working voltages up to and including 1100V)
xxix)	IS: 1554 (part-I)	PVC insulated (heavy duty) electric cables: Part 1: for working voltages up to and including 1100 volts.
xxx)	IS: 4289	Flexible cables for lifts and other flexible connections: Part 1: Elastomer insulated cables.

xxxi) BS: 970 Wrought steels in the form of blooms, billets, bars and forgings.

xxxii) IS: 5749/ BS 3017 Specification for Forged Rams horn Hooks

Indian electricity rules - 1956.

In the event of any conflict between the specification and standards mentioned above, the more stringent of the two as per interpretation of purchaser shall govern.

3.0.0 **DOUBLE GIRDER EOT CRANE**

3.1.0 **DESIGN REQUIREMENTS**

3.1.1 The crane shall be designed in accordance with the latest edition of IS-3177 , IS-807 and any other standard as referred there in and subject to any modification and requirement as specified herein after.

Class of crane mechanism shall correspond to that of the crane requirement and as specified elsewhere.

3.1.2 LT storm/parking brakes shall be also be considered in addition to service brakes. The design wind speed and other factors for brake selection shall considered in line with details given elsewhere in the specification.

3.1.3 Safety devices should be provided with all equipment/parts covered under this specification.

3.1.4 Parts requiring replacement or lubrication shall easily be accessible without dismantling the other equipment or structures. All electrical cables shall be laid to comply with recognized standards and purchaser's requirements.

3.1.5 For welded construction such as bridge girders, end carriages, rope drum, gearboxes etc. steel shall be conforming to IS-2062 quality. Welding shall be carried out only by qualified welders and subjected to NDT as specified in Quality Plan.

Welding shall be carried out by welders qualified as per ASME Boiler and Pressure vessel code Sec. IX. Radiographs shall be inspected to a sensitivity of 2%.

a. Welding shall be performed by shielded electric arc, gas or other approved methods. The electrodes used for welding shall conform to AWS A5.1.
b. Wherever lateral welding of the main plates of box girders are required, it shall be butt-welded.

c. Qualification of welding procedure and welder: These shall be carried out as per ASME Boiler and Pressure vessel code Sec. IX - Welding and brazing qualifications.

d. Electrode designations and qualifications shall be as per AWS A 5.1.

e. Electrodes should be of radiography quality with heavy covering as per IS: 814 and relevant requirement of ASME Sec IX and IIC.

f. Bare electrodes as per IS: 7280 and flux wire combination as per IS: 3613.

3.1.6 No cast iron part shall be used on the crane and its accessories.

3.1.7 Guard shall be provided on crane to prevent the hoist ropes coming in contact with down shop leads.

Guards of an approved design, which will push forward or off the track any object such as a person foot or arm, placed across it. Guards shall be attached to each end of the end carriages.

Suitable guards shall be provided to revolving shafts, coupling etc.

3.1.8 All cables shall be clamped individually. All trailing cables shall be clamped with PVC or non-metallic clamp.

3.1.9 Walkways of CT shall be of chequered plate minimum 6 mm thick O/P at least 800 mm clear inside with non-skid toe plates 8mm thick, projecting 100 mm above the floor. Walkways shall be of rigid construction and designed to sustain a distributed load of not less than 300 kg/ sq. mm.

Intermediate posts for supporting handrails shall not be spaced more than 1.5 meters apart.

Ladders provided shall have at least 450mm clear width with 20 mm rungs (rods) spaced 300 mm apart.

3.1.10 All wheels, couplings, open gear etc. shall be provided with covers.

3.1.11 All bolts except those with locknut shall be provided with grip lock nuts or spring washers.

3.1.12 Fasteners for pedestal blocks, motors, gearboxes etc. shall be easily removable from the top. Studs shall not be used as fasteners for mechanical items except for fixing covers.

3.1.13 Defects in the material like fractures, cracks, blowholes, pitting etc. are not allowed. Rectification of any such flaw is permissible only with the approval of the purchaser.

3.1.14 All parts of the crane shall be thoroughly cleaned of mill scales, rust or foreign matter and then painted as per the specification requirements.

The permissible camber shall be shown in drawing or data sheet submitted for approval.

3.2.0 **STRUCTURAL DETAILS**

3.2.1.0 Crane structure shall be designed in accordance with the latest edition of IS-807 after taking the following additions/deviations as applicable.

3.2.1.1 Black bolts shall not be used in the main structure of the crane. The calculated strength of other bolted joints in structural members shall not be less than net strength of member plus 25%.

3.2.1.2 The calculated strength of riveted joint or joints made by friction grip bolts in structure members shall be not less than the calculated net strength of the member.

3.2.1.3 Bolts used in shear shall be fitted in to reamed hole.

3.2.1.4 Nuts and Bolts will be as per IS:1363, IS: 1364 and IS: 1367

High-tension friction grip bolts as per IS: 3757 and High- tension friction grip nuts as per IS: 6623

3.2.1.5 Transverse filled welding on load carrying member shall be avoided.

3.2.1.6 All butt welds on structural members subjected to tensile stress shall be of radiographic quality as ASME Sec VIII Div.1 acceptance norms.

3.2.1.7 Fillet welding on load carrying members shall be avoided.

3.2.1.8 For load carrying members the component plates, bars, angles and other rolled sections shall be minimum 8mm thick. For tubes having both ends sealed the minimum thickness shall be 4.9 mm (6 SWG). For unsealed tubes the minimum thickness shall be 8mm.

3.2.1.9 The cranes working out door or in corrosive environment, an allowance of 1.5 mm shall be added to the calculated thickness.

3.2.1.10 Minimum thickness of chequered plates for platform shall be over 6 mm over plain. Chequered plates shall not be considered for strength calculations of load carrying members.

3.2.1.11 Splice shall be designed to resist all the forces and moments to which it is subjected to plus 50% thereof.

3.2.1.12 However, in no case the strength developed by the splice shall be less than 50% of the effective strength of the material spliced. Splices shall be proportioned and arranged, so that the gravity axis of the splice in line with the gravity axis of the member joined so as to avoid the eccentricity of the loading.

3.2.1.13 The material of construction of the major components shall be as specified in the specification/data sheet. Manufacturer are however free to use alternate material material which are superior for the intended service. But in all the cases, prior concurrence of the purchaser is must.

3.2.1.14 Splices shall be designed to resist one and half times the forces and moments to which it is subjected, but in no case it shall be less than 2/3rd of the effective strength of the material spliced except that splices in the webs of the plate girders shall be designed for full strength of the web in shear as well as bending. For splicing tension members, the net section of the splice plate shall be ten percent more than that of the material spliced. Splices shall be proportioned and arranged, so that the gravity axes of the splices are in line with the gravity axis of the member to avoid eccentricity.

3.2.2 **Bridge Girder**

3.2.2.1 The bridge girder shall consist of a box construction with double Web plate girders or lattice girders and shall be of adequate strength to withstand the rolling loads and other stresses it is subjected to.. The design of the girder shall be in accordance with latest edition of IS- 807.

3.2.2.2 Maximum deflection of the bridge girder, with safe working load, shall not exceed 1/900 of the span or as per latest IS. The girder shall be supported on the centerline of LT wheels during the deflection check. The girder shall be cambered by an amount by an amount equal to the maximum deflection.

3.2.2.3 Box section shall be adequately reinforced by internal diaphragms and ribs to withstand the most severe combination of load that may develop under different working conditions. Additional Internal diaphragms shall be provided at points where external members are welded for providing support to drives etc.

3.2.2.4 Box girders shall be provided with end plates sealing. Diaphragms inside the girder shall extend to the full - width & depth of the girder and the web plates shall be reinforced by angles all along the full length of the plates spaced midway between the

diaphragms. Full depth diaphragms or stiffeners shall be furnished at bridge drive supports and below the line shaft bearings.

3.2.2.5 Short diaphragms shall be furnished and are required to transmit the trolley wheel loads to the web plates. Trolley rail section shall not be considered into design of bridge girders.

3.2.2.6 Full length chequered platforms on both side shall be provided on the side of bridge girders as specified in data sheet - A.

3.2.2.7 For cabin operated crane, the access to operator's cabin or DSL maintenance cradle shall be from bridge platform. There should not be accumulation of water/oil inside the box girders. If required breathing holes can be provided for expansion / contraction, due to change in temperature. Tapped (threaded) holes shall be provided with ½" NPT plug in the bottom of the girders, at both ends, to drain off any accumulation of water / Oil inside the girder. Instruction shall be painted on the girders to remove the plug and check for water/oil before lifting. Plug shall be replaced after installation.

3.2.2.8 All connection splices shall be designed for full strength of member of loads indicated unless otherwise approved. Beams and connections shall be designed for 60% of shear capacity of beam section plus additional axial load if any. Not more than one splice shall be provided to make up full length of number.

3.2.2.9 Maximum Span/ Depth ratio for Girder

- Plate Girder : 18
- Lattice Girder: 12

3.2.3 **End carriage**

3.2.3.1 End carriages shall be fabricated from rolled steel section or plates. End carriage shall be of ample strength to resist all stresses likely to be imposed on them under service conditions including collision with other cranes or stops. The length of the end carriages shall be such that no other part of the crane is damaged in collision. End carriage shall be so designed as to distribute the load evenly between the wheels from each bridge girders.

3.2.3.2 The wheel base shall not be less than 1/5th of the span. End carriage shall be fitted with safety stop to prevent the end carriage falling more than 25 mm in the event of breakage of a track wheel, bogies or axle.

3.2.3.3 Suitable jacking pads at a suitable height from rail level shall be provided on each crane for crane jacking. Jacking pad dimensions shall be suitable for full seating of the jacking pad seat without any instability. When changing the track wheel, jacking pads shall not interfere with replacement of track wheel.

3.2.4 **Crab (Trolley)**

3.2.4.1 The crab frame shall be built from heavy steel section, welded properly to form single piece frame & to resist vertical, lateral and torsional strain and to support all loads without undue deflection. It should be properly machined to receive hoisting mechanism, cross traverse arrangement/mechanism, wheels etc. etc.

3.2.4.2 Sheaves, part of hoisting mechanism, shall be so arranged on trolley that rope reeling arrangement shall ensure lifting of load in vertical line with minimum of swing or side movement. Trolley shall be provided with chequered plates all over except for opening required for ropes and equipment foundation. Equipment foundation shall not be welded/ supported on chequered plates. Toe plates 100 mm high and 6mm thick shall be provided around opening provided for movement of ropes. Suitable railing shall also be provided around the opening for rope in case the opening is large.

3.2.4.3 **Platforms and Ladders**

a) Safe means of access shall be provided to the operator's cab and to every place where any person engaged in the examination or maintenance of the crane has to work. Adequate handholds and footholds shall be provided as necessary..

b) Every platform shall be provided with steel chequered plate top and be securely fenced with 1050 mm high double tier hand rails and toe boards. Platforms shall be of sufficient width to enable normal maintenance work to be undertaken safely

c) Safety hand railing of tubular construction 32 mm NB Medium class of IS: 1161 having top and bottom rail at height of 1050 mm and 600 mm and vertical post spacing not exceeding 1500 mm with provision of kick plate (100 mm high and 6 mm thick) shall be provided on bridge walkways and on end carriages, staircases, landing in cabin, trolley and at any other place where access is provided. Bends

shall be neat and made by machine. The top rail should be so laid that there is no intermediate obstruction and hand need not be lifted from rail while walking

d) In case lattice riveted construction is offered for the bridge girder, full length chequered plate platform with adequate headroom shall also be provided at bottom chord level for periodic checking of all rivets/bolts and other items.

e) Access to operator's cabin from bridge girder platform shall be by staircase having adequate width and proper sloping.

3.2.4.4 Operator's Cabin

3.2.5.1 Cabin shall have ample size and with clear headroom of 2m for accommodating controllers, main isolating switch and other accessories for the operation of the crane. All electrical equipment in crane cabin shall be suitably enclosed for the safety of the operator.

3.2.5.2 Cabin's platform shall be covered with an electric insulating carpet of 5mm thick.

3.2.5.3 An electric warning horn shall be provided and mounted on underside of the cabin. Control shall be arranged in such a way that the horn operates automatically when bridge travel motor is energised. In addition, manual control shall be provided on operator's cabin at a location ergonomically suitable to the operator.

3.2.5.4 Manual control shall not override automatic control and shall serve only to operate horn when the bridge is not in motion. Manual control shall be of the manual hold down type with automatic return to the open position. Horn shall be of heavy-duty howler type & adequate rating.

A foot operated electric warning horn of double bell suitable type suitable for 240 VAC of noise level 95dBA at 3.5m

3.2.5.5 One number portable fire extinguisher of 4.5 Kg capacity or as specified elsewhere in the specification shall be provided inside the cabin.

3.2.5.6 A swing-way operator's chair.

3.2.5.7 Adequate illumination as per date Sheet A or as specified else where in the spec.

3.2.5.8 A non-oscillating ventilating fan with 380 mm sweep with complete guard and regulator.

3.2.5.9 Brief description of crane operation, Maintenance and periodical lubrication etc. typed in English and in local language neatly framed in a permanent frame for easy reference.

3.2.5.10 Area of the cabin shall be 2500x1850 (min.), with headroom as 2000 mm clear.

3.2.5.11 A distinct type alarm with conspicuous warning light on either side of the crane bridge to indicate overloading of the crane.

3.2.5.12 Suitable inspection cages to accommodate two persons to facilitate inspection of DSL.

3.3.0 **MECHANICAL**

3.3.1 **Rope drums**

Rope drums shall be of mild steel plate fabricated or of cast steel as the case may be. All fabricated rope drums shall be stress relieved. The drum shall be so designed to take full length of hoisting rope in single layers. The end of the rope shall be anchored to the drum in such a way that the charger in readily accessible. Each rope shall have not less than two (2) full turns on the drum when the hook is at lowest position not taking into consideration the turns covered by the rope in charge. One spare groove shall be provided for each rope lead when the hook is at the highest position. Each rope end shall be clamped with minimum two clamping wedges with at least two bolts on each clamping arrangement.

The pitch diameter of the drum shall be as per IS - 3177 or as specified elsewhere. The depth of the grove shall not be less than 0.35 times the rope diameter. Each rope shall be clamped to drum with two clamp wedges with at least two numbers of bolts on each clamping arrangement.

For evaluation of Radiography the designed thickness of the drum (top of crest to ID) shall be taken into consideration and not the thickness of plate selected.

3.3.2 **Hoist ropes**

Ropes of steel core as specified in Data sheet" A" shall be of right hand lay, 6x37 or 6x36 construction of extra flexible plough steel having minimum tensile strength as 180 kg/cm^2. Left hand lay wire ropes shall not be used (Reverse bend ropes shall be avoided).

3.3.3 **Rope sheaves**

Sheaves shall be of cast (Castings to IS: 1030 Gr. II with Y.P. greater than 50% of UTS) or forged steel. All sheaves shall be identical, however, exception may be made for equalizer sheave. Sheave groove shall be ground finished for getting increase rope life. Equalizer sheave shall be arranged to turn and swivel in order to maintain rope alignment under all circumstances.

3.3.4 **Wheels**

LT & CT wheels shall be double flanged with taper/ straight tread. The wheels shall be capable of taking up misalignment in span as specified. Solid wheel shall either be of forged steel or as specified in Data sheet. The wheel rim shall be with minimum hardness of BHN 300-350. Wheels may be either hardened on tread portion as per IS –3177 or Volume hardened. Contact stresses between wheels and rails should be within permissible limits.

3.3.5 **Buffer**

Each End carriage shall be provided with buffer as per data sheet 'A'. Buffers should be so located that removal is not required while changing wheels or bogies. Buffers shall have sufficient tension on energy absorption capacity to bring the unloaded crane to rest from the speed of 50% of the rated speed to zero speed. Buffer is to be fitted to each end of carriage assembly and crab so that buffer contact takes place before the bridge or trolley reaches the end of rail.

3.3.6 **LT drive**

The bridge motion shall be achieved by suitable drive arrangement as specified elsewhere. When twin drives are used, these shall be operating in unison to avoid skewing effect. The drives shall be interlocked for simultaneous starting, stopping & speed control.

3.3.7 **CT drive**

Trolley drive shall be achieved by suitable drives & power shall be transmitted to the geared wheel by means of pinions mounted on both ends of the output shaft.

3.3.8. **Gearing**

3.3.8.1 Gears in speed reducer unit for bridge drive, hoists and trolley drive gearing shall be enclosed in substantial housing and shall operate in oil bath. The housing shall be of sufficient design not to permit temperature in excess of 90°C for the oil bath. Spur and helical gearing shall normally be used for all motions. Worms and bevel gears shall

not be used. First high-speed reduction shall be through helical gears. All gears shall be hardened and tempered and of alloy steel with machine cut teeth 1.6 Micron finish or better and lapped with some minimum applied load to remove high spots and to improve tooth contact. Cast alloy steel is acceptable only for gears in the last stage of speed reduction. Surface hardening of teeth is not acceptable. Gear teeth shall preferably be cut in metric module system. Gears shall be designed to meet requirement of crane duty as per IS: 3177. The ratings of gears shall be established as per IS: 4660.

3.3.9 **Gear Box**

3.3.9.1 All gears shall be completely covered and enclosed in oil tight casing & sealed with gasket. In case of totally enclosed gearboxes, splash or automatic lubrication system shall be used. Covers shall be split horizontally at each shaft centre line, so that top half can be removed for inspection and repair with out disturbing the bottom half. Gear shafts shall be supported on ball/roller bearings mounted in gearbox unless specially agreed otherwise. The bear boxes shall be provided with breather, air vent, oil level indicator, dip stick, drain plug and lugs for lifting.

Radial clearance between the gear boxes inner surface and outside diameter of the gears shall be at least 1.25 times the depth of larger gear tooth inside the gear box or 20mm which ever in higher. Facial clearance between inner surface of gearbox and face of gear or pinion shall be at least 20 mm. Gearbox shall be inspected in line with QP and as per PEM (Q)/001 enclosed.

3.3.9.2 The gearboxes shall be of mild steel or cast steel. All fabricated gearboxes shall be stress relieved at a temperature between 590 to 680 deg. C. The temperature shall be maintained within ± 20 deg. C and at no time during the soaking cycle the temperature shall fall below 590 deg. C or exceed 680 deg. C. Soaking shall be done for a period proportionate to 1 (one) hour/ 2.5 cm. of wall thickness.

3.3.10 **Bearing**

3.3.10.1 Ball and roller antifriction bearing of FAG, SKF, NBC, NORMA, make shall be used throughout, except where specified otherwise. Drive side bearing on Hoisting equipment shall be ball / roller bearing type. Rated life of ball and roller bearing shall be not less than total working life as per relevant Codes IS-3177. Life of bearing shall be calculated in accordance with manufacturers recommendations.

3.3.10.2 Provision shall be made for service lubrication of all bearings. Lubrication arrangement and clamping shall be done neatly. Bends in pipe shall be done with the help of machine. Bearing enclosures shall be designed as far a practicable to exclude dirt and shall prevent oil leakage. Accessibility should be such that parts may be safely lubricated from the walkway or ladder when the crane is not in motion.

3.3.11. **Shafts, Couplings and axles**

3.3.11.1 Shafts and axles shall be made from solid rolled or forged steel bars and shall have ample strength and rigidity and adequate bearing surface. If shouldered, they shall be provided with fillets of ample radius and /or be tapered to avoid stress concentration. Motor shafts shall be connected to gearbox input extension shafts through flexible gear coupling. Solid coupling shall be used for connecting intermediate lengths of long travel shafts. For driving hoist drum full-geared couplings shall be used between hoists drum & hoist gearbox output shaft. Couplings shall be of cast steel/wrought steel conforming to IS: 210 grade 260 and shall be designed to suit service conditions.

3.3.11.2 Self-aligning type gear couplings shall be used between connection shafts to take care of transverse connection shafts to take care of transverse as well as axial movement whenever necessary. Whenever components of considerable amount of inertia are directly mounted on the high-speed shaft (e.g. brake drum, coupling etc.) they shall be balanced statically to minimise vibration.

3.3.12 **Repair Cage**

A repair cage shall be provided on the inside of the end carriage for attending the main current collectors. The repair cage shall be adequately sized to accommodate two persons. And guarded for safety and correctly located for the intended service. Suitable access to the cage shall be provided. Repair cage shall be provided at the corner of the crane.

3.3.13 **Lifting hook**

Standard hooks shall be used unless otherwise specified. These hooks shall conform to the latest edition. All hooks used shall be in normalized condition only.

3.3.14 **LIFTING HOOK BLOCK ASSY**

3.3.14.1 Lifting hook block assembly shall be Ram shorn type or approved for capacity greater than 50 Tonnes and point hook with Shank for capacity below 50 Tonnes and shall be of forged steel construction. Hooks shall be manufactured from Blooms, billets,

rounds by forging with forging ratio of at least 3:1. Hooks manufactured from plates are not acceptable. All hooks used shall be in normalized condition only. Each hook shall be supported on ball or roller thrust bearing and shall rotate freely.

3.3.14.2 The sheaves of the hook block shall be enclosed in an oil tight casing permitting generous lubrication of wire ropes, sheaves and also preventing accidental tapping of hands.

3.3.15 **Brakes**

3.3.15.1 Selection and design of brakes shall be such as to meet the requirement. Brakes shall be designed to suit 150% of torque transmitted to the brake drum with full load for hoist motions and 125% of motor rated torque before derating for LT/CT motion. Brakes shall be provided as specified in Data Sheet 'A'. Brake drum shall be separately mounted and coupling halves shall not be used as brake drum.

i) **SERVICE BRAKE**

Double shoe types & disc type service brakes shall be provided for each motion of the crane as specified in Data Sheet. The service brakes shall apply automatically when power supply to the drive motor is cut off or fails.

ii) **HOIST CONTROL**

Hoist motion (both main & aux) shall be provided with a self-contained sturdy braking system to control the speed of hoisting as well as lowering down to 10% rated speed. The braking system shall be reasonably uniform and effective in all loads at any position.

3.4.0 **ELECTRICAL**

3.4.1 The scope of supply shall cover all electrical equipments comprising from Main isolating switch, down shop leads, trolley conductors, current collectors etc.

3.4.1.1 Main Disconnecting/Isolating Switch fuse unit shall be provided at 1.5M above the operating floor level at one end / at both the ends of bay length or in the middle as specified in the data sheet A. Termination of incoming power supply cable to isolating switch fuse unit and further cable from switch to down shop leads shall be included in

the bidder's scope of work. The switch shall be provided with Power ON Red indication lamp.

3.4.1.2 Run way conductors (Down shop leads) shrouded conductor as specified in the data sheet A shall have four conductors. One of the conductors shall be connected to earth grid for earthing connections of all electrical equipments on the crane and shall be connected to suitable collecting gear of earth conductor. Voltage drop across the down shop leads shall be less than 2% or specified in data sheet "A". It shall be supplied with brackets. Maintenance cradle for DSL shall be provided on crane. Sufficient allowance of min 20% for wear & tear shall be considered while sizing the conductor. The runway conductors shall be supported on brackets and insulators.

3.4.1.3 The current collectors shall be with adequate current carrying capacity and shall maintain adequate contact pressure. Spacing between current collectors shall be such as to provide sufficient quenching area for sparks coming out of collectors surface. The collector system per conductor shall spring loaded CI/carbon metallic shoes to maintain adequate contact pressure.

3.4.1.4 The cable, supplying power to crane trolley shall be flexible trailing cable as per IS-9968 Part I (latest edition) and mounted on retracting supports (festoon type).

3.4.2 **DRIVE MOTORS**

3.4.2.1 Crane Motors shall be totally enclosed, fan cooled and as per data sheet 'A'. The starting torque of motor shall not be less than 2.25 times the rated torque and pull out torque shall not be less than 275% of the rated full load torque of motor.. In case of VVVF drive system, the creep speed will be achieved through VVVF drives and the motors for Main hoists, Auxiliary hoist, CT and LT will be Squirrel cage. Hoisting drive motors shall be provided with antifriction roller / ball bearings on the drive side.

3.4.2.2 Ambient correction factors as well as voltage /frequency correction factors depending upon the ambient temperature and voltage /frequency variation shall be applied to de-rate the motors. The minimum margin of 10% shall be considered over the calculated rating of the motor. The protection class of the motors shall be as IP-55. Motors shall be tested at manufacturers works in accordance with IS-325/as per agreed Quality plan & Reports shall be submitted for approval. Motors shall comply with the requirement of IS-325-1978 or as per the motor spec.

3.4.2.3 All the motors shall be provided with lifting lugs Two earth terminals of adequate size to accept the earthing conductors shall be provided at diametrically opposite points unless specifically designed For higher speeds, motors shall be capable of with standing 2.5 times the rated speed.

3.4.2.4 Motors shall be painted in line with painting instructions specified in Painting Scheme Annexure IV attached along with the technical specification.

3.4.3 **Limit switches**

The hoist mechanism of the crane shall be provided with rotary type limit switch to open the control circuit & in order to prevent the crane hook from over hoisting and over lowering, One gravity type back up limit switch of hand reset type shall also be provided. This switch will operate in the event of failure of main limit switch. Lever operated limit switches shall be provided at both ends of longitudinal travel and cross traverse. These limit switches shall be self reset type. The limit switches shall be as per “Data Sheet A”

3.4.4 **Switch**

All switches shall be hand operated; air break, heavy duty, quick make and quick break type. Incoming supply disconnect switch shall be interlocked with panel door so that the same cannot be opened unless the switch is in OFF position. Device to defeat this interlock shall be included. Safety Interlocks-Disconnect Switch-The operating handle of the main/ safety disconnect switch shall be mechanically interlocked with enclosure cover such that the same can not be opened unless the switch is in OFF position. Main/ safety disconnect switch shall have provision of pad locking in OFF position

3.4.5. **Contactors.**

Contactors shall be suitable for heavy duty, with current rating not less than connected motor full load current. All reversing contactors shall be mechanically and electrically interlocked. Arc chutes shall be provided where necessary.

Each contactor shall be provided with three positive acting ambient temp. Compensated thermal overload relay with adjustable setting to suit the motor current. The relay shall be hand reset type, suitable for current. The relays shall be replaceable from front. The main contactor shall be electrically interlocked so that it

can not close unless all the motor overload relays are RESET and all controllers are in OFF position. The main contactor shall be also opened by means of emergency push buttons and hoist limit switches.

3.4.6 **Push button and lamp**

Push button shall be spring return type with 2 NO + 2 NC contacts, rated 10A, 240 V AC. Indicating lamps and lens shall be replaceable from front.

3.4.7 **Protective Panel**

3.4.8.1 The electrical protective panel shall be a cubicle fabricated from 2 mm thick sheet steel with lockable-hinged door. The control cabinet's door shall be interlocked with the operating handles of isolating switches of supply circuits so as to prevent opening of the door when an isolating switch is closed. A device for bypassing the interlock shall also be provided. It shall be dust and vermin proof with degree of protection as IP-52 or as specified in data sheet A. All the equipment inside the panel shall have permanent identification. The panels shall be front connected type with front-hinged door for access to wiring and terminals. Engraved nameplate shall be furnished for all panels and also for the equipments and devices mounted there on.

The following minimum equipments shall be provided.

a) One triple pole air break type main contactor with thermal overload relay.

b) One triple pole main line connecting/disconnecting switch.

c) Emergency push button at convenient height for the operation for interruption of the entire power.

d) Thermal overload relay for each drive. It shall be ambient temperature compensated and adjustable type.

e) Contactors, timer and auxiliary contactors.

f) Portable Lighting Transformer rated for 415/24V.

g) Lighting Voltage Transformer with fuse 415/24V.

h) Control transformer with fuses.

i) Indicating lamps to indicate the live condition of all three phases.

j) Main supply ON/OFF lamps on the door of the protective panel.

k) Electrical interlock shall be provided to prevent the main contactor being closed

l) unless all controllers are in OFF position.

m) Other equipments as per supplier's standard practice. Air break contactors shall conform to category AC-4 duty. The main contacts shall have the rating for 5 Amps or as specified in the data sheet A. The contactor drop off voltage shall be between 45-50% of rated voltage.

n) All internal wiring shall be identified with numbering rules at both ends as per the relevant wiring diagram.

o) Each panel shall have internal illumination with fluorescent lamp. The inside of the panel shall be painted white.

o) Separate terminal blocks shall be provided for terminating circuits of various voltage classes. At least 20% spare terminals for the wire terminations shall be provided in the cabinet.

3.4.9 **Master Controller (Desk type)**

3.4.9.1 The speed of each drive shall be controlled by master controller or as specified in the data Sheet 'A' Master Controller for hoisting motion shall have 5 steps and for LT/CT it shall have minimum 4 steps. Master controller contacts shall be fully enclosed in dust and vermin proof enclosure.

3.4.9.2 The master controller is provided with spring to its "OFF" position. Master Controller in "OFF Position shall disconnect power supply to motors. Each controller shall bear suitably engraved inscription of motions in English and direction of motion by Arrow. Master controller shall be suitably located in operator's cabin as to provide maximum convenient and view to the operator. The master controller shall be provided with terminal block to facilitate external connection.

3.4.9.3 Starter Panel

Separate panels shall be provided for CT, LT & hoist motion (Main and Auxiliary), with following type of items.

a) Contactors : AC4 duty for reversing applications
AC3 duty for non-reversing applications

b) Switches : AC23 for motor application.
AC22 for other application

c) Fuses : HRC

d) Overload relays: Temperature compensated bi-metallic with single phasing preventor.

3.4.10 **MOTOR CONTROL PANEL**

The motor control panels shall be dust and weatherproof to IP-55 or as specified in "Data Sheet A" & shall be provided separate for each motion. The panel shall contain minimum the following components.

a) Switch fuse unit with contacts of adequate rating for each motion.

b) Thermal overload relay for each drive. These shall be ambient temperature compensated adjustable type.

c) Contactors, timers and auxiliary contactors.

d) The panel shall be provided with space heater. The space heater with thermostat shall be located at the bottom of the panel and shall have individual ON/OFF switch.

e) Terminal blocks shall be stud or snap on type. A protective cover shall be fixed on top of terminal blocks to prevent accidental contact. A minimum of 20% spare terminals shall be provided.

f) Air break contactors shall be provided for main supply as well as for motors. They shall confirm to category AC-4 as per IS-1322. These shall have three main contacts and 2 No. & 2 NC auxiliary contacts.

g) The main contacts shall have the ratings as per duty requirement but auxiliary contact shall be rated for 5 amp 240V AC. The contactor drop off voltage shall be between 45-50% of rated voltage. The contactor coil shall be suitable for 240V AC supply.

h) The auxiliary contactors shall have 4 No. + 4 NC contacts for control and interlocking purposes. The contacts shall be convertible. The contacts rating shall be suitable for 5 amps at 240 Volts AC.

i) Adequate protection for overload and short circuit shall be provided for all the three phases of each motor.

j) Double pole switch fuse unit for control circuit of the contractor 'START (push button and a pilot lamp with the red lens for indicating the contactor "CLOSED" shall be furnished.

3.4.11 **Illumination**

Crane lighting and space heating system shall be designed for 240V, 1Phase 50Hz supply and receptacle system with 24V 1Phase 50Hz supply or as specified in the

Data sheet A. Suitable dry type transformers shall be furnished for this purpose, complete with isolation facility and Primary/secondary fuses.

a) Branch Circuits for lighting and receptacles shall be individually protected by switch fuse units.

b) 40W fluorescent fixtures / 60W bulkhead fittings with fluorescent lamp shall be used for lighting operator's cabin and bridge platform.

c) Four (4) - 400 W / 250 W high bay Sodium vapour / Mercury vapour lamps shall be provided under the bridge as specified in the data sheet "A"

d) All lighting fixtures shall be mounted with anti-vibration mounting and shall be easily accessible for maintenance.

e) 24V - 5A - 3 pin industrial socket outlets shall be provided. Two (2) in operator's cabin and minimum four (4) on the bridge along the walk way on both sides of full length platforms.

f) One (1) portable 40 W hand lamp with min. half span length flexible cable for inspection of crane components.

g) Operator's cabin shall be provided with one (1) electric fan and one (1) heavy-duty industrial siren. Siren shall be foot operated.

3.4.13 **Grounding**

3.4.13.1 The crane structure, motor frame and all other electrical equipments shall be grounded in accordance with the Indian Electricity Rules. The connections from Crane Bridge to 4th conductor of down shop leads shall be by means of current collector.

3.4.13.2 The equipment fed by flexible cables shall be grounded by means of fourth core provided in the flexible trailing cable. Pendent push button station shall be earthed separately.

3.4.13.3 The crane structures, motor frames & metal of all electrical equipment on EOT crane shall be effectively grounded as per Indian Electricity Rules. Grounding of the crane to the nearest pit shall be in manufacturers scope.

3.4.14 Red warning light 3 Nos. shall be provided at both ends of the gantry girder to indicate the aliveness of DSL.

3.4.15 **Wiring Systems**

a) Power wiring to any motor shall be done with 1100V grade

aluminium/Cu conductor, extruded PVC insulated armoured FRLS cable of suitable sizes as specified in Data Sheet A.

b) For selecting the cable rating, cable for power wiring, consideration shall be given to the motor duty, ambient temperature grouping and disposition of the cables voltage drop etc.

c) All control and auxiliary external circuit wiring shall be done with PVC insulated FRLS type 2.5mm stranded copper conductor.

d) Armoured cables or un-armoured running through the flexible conduits may be used for power wiring / control and auxiliary circuit wiring shall run through flexible conduits.

e) Each motor shall be wired independently. Power and control wiring shall be effectively separated.

f) Each wire shall be identified at both ends with wire designation in accordance with circuit wiring diagram.

g) All wire termination to the panels shall be provided with clamp type connections screw. Screw Type terminals with screw directly impinging on conductors are not acceptable.

h) Multi way terminal blocks complete with screw nut, washer and marking strips shall be furnished for terminating the panel wiring.

i) Not more than two wires shall be connected to any terminal on either side of terminal block. If necessary number of terminals shall be jumped together to provide the wiring points

j) Each terminal block shall be marked with designation in accordance with conductors wiring diagram.

3.5.0 **Radio Remote Control**

a) The equipment should have facility to control EOT crane by radio frequency based wireless remote unit. The equipment should be supplied with transmitter unit, receiver unit, encoder unit, decoder unit, interface panel, coupling system, battery unit and any other control gear if required.

b) The equipment should be based upon the microprocessor based digital technology with almost nil hard wiring.

c) The remote unit should communicate up to the distance of approximately 100 meters.

d) The system has to integrate with the control system of crane, which operates at 110 V AC, Single phase.

e) The remote unit should have transmitter which can be mounted on shoulder by suitable belt. Main controls can be of single joystick movement or double joystick movement type stepped control with spring return. The Micro control should be toggle switch type or push control type.

f) Frequency allotment of radio remote unit from Govt. of India, Deptt. of Telecommunication or any other agency shall be the responsibility of supplier.

g) The transmitter and receiver unit should have its own frequency and address code with each system having its own security code so that one particular set becomes unique and there is no interference from any other remote unit device. A microprocessor should check all security codes. The processor should have its own watchdog circuit. The receiver FM band should be sufficiently narrow to allow only passing of desired frequency and valid command. Any error should shut down the system immediately.

h) The remote unit should have safety key to prevent any unauthorized operation. All the crane operations should stop at once the communication break down occurs.

i) On local unit (receiver side), the system should be provided with one selector switch so that EOT crane can be operated either from Operator cabin or radio remote unit.

j) In case tandem operation is envisaged, a suitable selector switch shall be provided in the cabin for selection of Tandem/normal operation.

k) The receiver unit along with I/O interface unit should be able to bear the vibrations and shocks encountered in normal usage of EOT crane.

l) The system should have very fast response time.

DATA SHEET FOR TG HALL EOT CRANE WITH VVVF DRIVES

*** Information's are to be furnished by bidder during detail engineering stage only.**

Sr. No.		DESCRIPTION	TECHNICAL PARTICULARS
1.0.0		**General**	
1.1.0		**Name of manufacturer**	*
	a.	EOT Crane	*
	b.	Crane motors	*
	c.	Runway conductors	*
1.2.0		**Weight of equipments**	
	a.	Bridge assembly	*
	b.	Trolley assembly	*
	c.	Total crane weight	*
	d.	Total weight of the gantry rail	*
	e.	Total weight of DSL	*
	f.	Total weight of all the equipments under this specification	*
1.3.0		**Design, fabrication and testing of the crane confirm to standard / code number**	Mechanical and Electrical as per IS: 3177-1999 & Structure design in accordance to IS 807:2006.
1.4.0		**Number of cranes**	Two (2) nos.with facility to operate in independent operation as well as in tandem with common lifting beam.
1.5.0		**Crane classification**	M5 for Mechanical , Electrical & Structural
1.6.0		**Suitable for outdoor or indoor duty**	Indoor
1.7.0		**Capacity and lift**	
1.7.1		**Main hoist**	
	a.	Rated SWC – tonnes	**200T**
	b.	Test load SWC – tonnes	Rated SWC and over load test : 125% of SWC
1.7.2		**Aux. hoists**	
	a.	Rated SWC – tonnes	**20T**
	b.	Test load SWC – tonnes	Rated SWC and over load test : 125% of SWC

1.8.0		**Span**	**33.45 m**	
1.9.0		**Operation from**	Cabin + Pendent Push Button + radio remote control	
2.00		**CRANE PERFORMANCE**		
2.1.0		Crane speed with full load	**Full speed M/Min**	**Creep speed M/Min**
	a.	Main hoist	**1.6**	10% of main speed (thru' VVVF drives)
	b.	Aux. hoist	**7.5**	10% of main speed (thru' VVVF drives)
	c.	Trolley travel (CT)	**15**	10% of main speed (thru' VVVF drives)
	d.	Longitudinal bridge travel (LT)	**30**	10% of main speed (thru' VVVF drives)
2.2.0		Acceleration values	LT motion (bridge travel)	CT motion (trolley travel)
			As per IS: 3177	As per IS: 3177
2.3.0		**Lift in Metres**	The lifting rope shall be of sufficient length to permit the hook to reach the zero level and below zero level as applicable.	
	a.	Main Hoist	**29 m**	
	b.	Aux Hoist	**34.5 m**	
2.4.0		Hook Approaches from centre line of rail		
	a.	Main hook (cabin end)	**2300 mm**	
	b.	Aux. Hook (cabin-end)	**4000 mm**	
	c.	Main hook (other end)	**3500 mm**	
	d.	Aux. Hook (other end)	**1800 mm**	
2.5.0		**Hand Rail Pipes**	32 mm NB Medium class of IS: 1161 having top and bottom rail at height of 1050 mm and 600 mm and vertical post spacing not exceeding 1500 mm with provision of kick plate (100 mm high and 6mm thick)	
3.0.0		**COMPONENT DETAILS**		
3.1.0		**Trolley**		
	a.	Type	Fabricated	
	b.	Method of fabrication	Fusion welded	
	c.	Material	Mild steel, grade 'B' of IS 2062 in 100% killed, normalised and ultrasonically tested quality or high strength steel of IS 8500 as appropriate.	

	d.	Centre to centre distance of wheels (on the same rails)	*	
	e.	Whether jacking pads for lifting trolley provided or not	Yes	
3.2.0		**Rope drums**	**Main hoist**	**Aux. Hoist**
	a.	Dimensions in mm length and diameter (PCD)	During detailed engineering	During detailed engineering
	b.	Material (Indicate IS)	Seamless pipe ASTM -106/56 or Mild steel, grade 'B' of IS 2062 in 100% killed, normalised and ultrasonically tested quality or high strength steel of IS 8500 as appropriate.	
	c.	Flange / flangeless	Flanged	
	d.	Numbers provided	One for each hoist	
	e.	Number of grooves	*	*
	f.	Type of grooves	Identical Right hand and Left hand	
	g.	Diameter on bottom of grooves	During detailed engineering	During detailed engineering
3.3.0		**Rope details**		
	a.	Construction	Extra flexible plough steel , 6 x 36 construction	
	b.	Grade	During detailed engineering	
	c.	Standard conforming to	IS: 2266	
	d.	Diameter in mm	*	*
	e.	Breaking strength	*	*
	f.	Tensile designation	1960	
	g.	Factor of safety	5.25 as per IS	5.25 as per IS
	h.	Type of core	Fibre	Fibre
	i.	Number of falls	*	*
	j	Length of rope	*	*
3.4.0		**Sheaves details**	**Main hoist**	**Aux. Hoist**
	a.	Material	IS: 2062 Gr B	
	b.	Diameter of main sheaves in mm on Root	During detailed engineering	During detailed engineering
	c.	Diameter of Equalizing sheaves (in mm) on Root	Should not be less 62% of calculated main sheave diameter	Should not be less 62% of calculated main sheave diameter
	d.	Type of guards provided	Fabricated from Sheet steel	

3.5.0		**COUPLINGS & SHAFTING**				
3.5.1		Coupling details (between motor and gear box)	Main hoist	Aux. Hoist	Cross Travel	Long Travel
	a.	Type	Flexible geared Type			
	b.	Size & Torque rating	*			
	c.	Guards and enclosures	Provided			
3.5.2		Coupling details (between gear box and wheels)	Cross Travel (CT)		Long Travel (LT)	
	a.	Type	Flexible geared type			
	b.	Size & Torque rating	*			
	c.	Guards and enclosures provided	Yes			
3.5.3		Coupling details (between gear box and rope drum)	Main hoist		Aux. Hoist	
	a.	Type	Flexible Built-in gear couplings			
	b.	Size	*			
	c.	Guards and enclosures provided	Yes			
3.5.4		**Shafting (Output)**	**Cross Travel**		**Long Travel**	
	a.	Diameter in mm	*		*	
	b.	Factor of Safety	As per IS: 3177-1999			
	c.	Number of support bearings	*		*	
	d.	Type of support bearing	*		*	
	e.	Arrangement of lubrication	Grease cups / Nipple			
	f.	Type of lubricant	Grease			
	g.	Max unsupported length of shaft in mm	*		*	
3.6.0		**Gear box details**				
3.6.1		Hoist Motions	**MH**	**MH Micro**	**AH**	**AH micro**
	a.	Type of mounting of gear box	Horizontal / Vertical			
	b.	Classification	Suitable for M5 duty			

	c.	Total number of reductions	*	Thru' VVVF drive	*	Thru' VVVF drive
	d.	Type of gears	Helical		Helical	
	e.	Reduction ratio	*			
	f.	Type of lubrication (grease / splash / pump lubrication)	Splash Lubrication			
	g.	Hardness (BHN) – gear	217-255 BHN			
	h.	Hardness (BHN) – pinion	266-300 BHN			
	i.	Difference in Gear and pinion hardness	Min 20 BHN			
	j.	Materials (gear/pinions)	Main Gears En 9/ 55C8/ IS2707 Gr. 1 or 2 Pinions En 19/ EN 24. Hardness conforming to IS: 3177			
	k.	Casings	Mild steel, grade 'B' of IS 2062 in 100% killed, normalised and ultrasonically tested quality or high strength steel of IS 8500 as appropriate.			
	l.	Noise level	85 db	NA	85 db	NA
	m.	Standard conforming to	IS: 4460 / AGMA			
3.6.2		**Travel Motions**	**CT**	**CT micro**	**LT**	**LT micro**
	a.	Type of mounting gear box	Vertical			
	b.	Classification	M5 duty			
	c.	Total number of reduction	3	Thru' VVVF drive	3	Thru' VVVF drive
	d.	Type of gears	Helical		Helical	
	e.	Reduction ratio	*		*	
	f.	Type of lubrication (grease / splash / pump lubrication)	Splash Lubrication			
	g.	Hardness (BHN) – gear	217-255 BHN			
	h.	Hardness (BHN) – pinion	266-300 BHN			
	i.	Difference in Gear and pinion hardness	Min 20 BHN			
	j.	Materials (gear / pinions)	Main Gears En 9/ 55C8/ IS2707 Gr. 1 or 2 Pinions En 19/ EN 24. Hardness conforming to IS: 3177			

	k.	Casings	Mild steel, grade 'B' of IS 2062 in 100% killed, normalised and ultrasonically tested quality or high strength steel of IS 8500 as appropriate.	
	l.	Standard conforming to	IS: 4460 / AGMA	
3.7.0		**Wheels details**	**Cross travel**	**Long travel**
	a.	Material	C 55 Mn 75 / EN 9 (55 C 8)	
	b.	Hardness	300 – 350 BHN	
	c.	Depth of hardness	10 mm (min)	
	d.	Tread diameter in mm	*	*
	e.	Tread width in mm	*	*
	f.	Process of hardening	Volume hardening	
	g.	Type	Double flanged straight tread	
	h.	Numbers provided	8 nos.	16 nos.
	i.	Specification conforming to	IS: 3177	
	j	Arrangement of lubrication	Grease	
3.8.0		**Lifting hooks**	**MH**	**AH**
	a.	Type	Ramshorn	'C' type
	b.	Safe lifting capacity	**200T**	**20T**
	c.	Material	As per IS 5749/ IS 15560	
	d.	Standard conforming to	IS: 5749/ BS 3017	IS: 15560
	e.	Hook can rotate	Yes	
	f.	Safety latch on hook provided	Yes	
	g.	Locking device on swivelling hook required or not	Provided	
3.9.0		**Buffers**	**Cross travel**	**Long travel**
	a.	Type	Spring loaded type. To be designed to bring the loaded crane to rest from speed of 50% of the rated speed.	
	b.	Numbers provided	4	4
	c.	Details of end stop	Mild steel, grade 'B' of IS 2062 in 100% killed, normalised and ultrasonically tested quality or high strength steel of IS 8500 as appropriate.	
3.10.0		**Brakes**		

3.10.1		Hoist Motions	MH	MH micro	AH	AH micro
	a	Type of brake (ac / dc / thruster) as per IS 3177	AC Electro-Hydraulic Thruster operated / DCEM			
	b.	Diameter of brake in mm	*	VVVFD controlled	*	VVVFD controlled
	c.	Torque rating Kg. M	*		*	
	d.	Number provided per motor	2 X 100 %		2 X 100 %	
	e.	Braking capacity (% of torque transmitted to the brake drum with full load.)	150%		150%	
	f.	Braking torque actually required	*		*	
	g.	Material				
		• Brake liners	Ferrodo liners			
		• Drum	CS IS : 1030 / CL 4 IS : 1875			
		• Springs	As per manufacturers standard			
	h.	Braking distance in mm	*	NA	*	NA
3.10.2		**Travel Motions**	**CT**	**CT micro**	**LT**	**LT micro**
	a.	Type of brake (ac / dc / thrustor) as per IS 3177	AC Electro-Hydraulic Thruster operated/DCEM			
	b.	Dia of brake in mm	*	VVVFD controlled	*	VVVFD controlled
	c.	Torque rating Kg.M	*		*	
	d.	Number provided	2 X 100 %		2 X 100 %	
	e.	Braking capacity (% of motor rated torque before derating)	125%		125%	
	f.	Braking torque actually required	*		*	
	g.	Material				
		• Brake liners	Ferrodo liners			
		• Drum	CS IS : 1030 / CL4 IS : 1875			
		• Springs	As per manufacturers standard			
		• Thrusters	*			
	h.	Braking distance in mm	*	NA	*	NA
3.11.0		**Drive system for hoisting**				

	a.	Arrangement of drive from motor to rope drum (main)	Through geared coupling and gear box				
	b.	Arrangement of drive from pony motor to rope drum (creep speed)	NA				
3.12.0		**Bearings**	**Crane hook**	**Trolley wheels**	**Rope drum**	**Gear box**	**Any other assembly**
	a.	Type	Antifriction ball / roller bearings				
	b.	Number provided for each	As per assembly requirements				
	c.	Method of lubrication	Grease lubrication				
	d	Bearing life	10,000 working hours.				
3.13.0		**Bridge girder**					
	a.	Type & Quantity	Box type – 2 nos. Material: Mild steel, grade 'B' of IS 2062 in 100% killed, normalised and ultrasonically tested quality or high strength steel of IS 8500 as appropriate.				
	b.	Size	*				
	c.	Vertical Deflection	Span / 900				
	d.	Type of connection to end carriage	By fitted bolts				
	e.	Width	*				
	f.	Length	*				
3.14.0		**Rails**					
	a.	Type / section	Rails sections as per IS: 3443 Grade 50 C 12. Rail to rail jointing shall be butt welded by thermit welding and fusion welding.				
	b.	Standard conforming to	IS: 3443				
	c.	Weight per metre	*				
	d.	Material	Rail Steel				
	e.	Top width in mm	*				
	f.	Height in mm	*				
3.15.0		**Type of platform required on the bridge**	Chequered plate platform 6mm thick over plain as per IS:3502.				
	a.	Position of access point	From cabin				
	b.	Emergency escape	Rung Ladder at ends				

	c.	Type of access platform to cabin	By Rung Ladder			
	d	Length	Full span length			
	e	Provided on both side	Yes			
	f.	Width of platform	Access walkway of not less than 800mm clear with hand railing of height of 1100mm along both sides of bridge girder and cross over walkways.			
3.16.0		**Type of operators cabin**				
	a.	Type of construction	Fixed / Open type			
	b.	Area and minimum clear height	2500/1850 mm with a head room of 2000mm.			
	c.	Warning horns and lights	• A foot operated electric warning horn of double bell type suitable for240 V AC. of noise level 95 dBA at 3.5 m. • One brass gong suspended outside the Cabin and operated from inside. • A distinct type alarm with conspicuous warning lights on either side ofthe crane bridge to indicate overloading of crane.			
	d.	Seating arrangement	Revolving type chair			
	e.	Position of controllers	In front / side of operator's chair			
3.17.0		**End carriage span (wheel base)**	As per IS 807 (latest edition)			
3.18.0		**Motors**				
3.18.1		**Hoist Motions**	**MH**	**MH micro**	**AH**	**AH micro**

	a.	Type	Three phase squirrel cage induction motors operated from VFD system and suitable for speed range and torque without exceeding temperature rise limits. Motors shall be provided with VPI insulation and insulated bearing on one side and shall be suitable for inverter duty.	Thru VVVF drive	Three phase squirrel cage induction motors operated from VFD system and suitable for speed range and torque without exceeding temperature rise limits. Motors shall be provided with VPI insulation and insulated bearing on one side and shall be suitable for inverter duty.	Thru VVVF drive
	b.	Enclosure	TEFC	NA	TEFC	NA
	c.	Numbers furnished	One per motion			
	d.	Voltage, phase and frequency	Suitable for rated frequency of 50 Hz with a variation of +3% and – 5% and 10% combined variation of voltage and frequency.			
	e.	Class of protection	IP – 55			
	f.	Rated capacity (KW)	Maximum continuous motor ratings shall be 10% above the maximum load demand of the driven equipment under entire operating range including voltage and frequency variations.			
	g.	Duration factor/duty	40 % CDF / S-4			
	h.	Speed (rpm)	*			
	i.	Class of insulation	Class 'F' for sq. cage motors with temp rise limited 70^0 C.			
	j.	Number of starts/ hour	150 starts / hr			
	k.	Contactors for motor	*			
	l.	Overload protection for motors provided	Yes			
	m	Space heater requirements	For motors of rating 30 KW and above			
3.18.2		**Travel Motions**	**CT**	**CT micro**	**LT**	**LT micro**

	a.	Type	Three phase squirrel cage induction motors operated from VFD system and suitable for speed range and torque without exceeding temperature rise limits. Motors shall be provided with VPI insulation and insulated bearing on one side and shall be suitable for inverter duty.	Thru VVVF drive	Three phase squirrel cage induction motors operated from VFD system and suitable for speed range and torque without exceeding temperature rise limits. Motors shall be provided with VPI insulation and insulated bearing on one side and shall be suitable for inverter duty.	Thru VVVF drives
	b.	Enclosure	TEFC	NA	TEFC	NA
	c.	Numbers furnished	Minimum One (1)	NA	Minimum one (1) drive at each end of bridge.	NA
	d.	Voltage, phase and frequency	Suitable for rated frequency of 50 Hz with a variation of +3% and – 5% and 10% combined variation of voltage and frequency.			
	e.	Class of protection	IP – 55			
	f.	Rated capacity (KW)	Maximum continuous motor ratings shall be 10% above the maximum load demand of the driven equipment under entire operating range including voltage and frequency variations.			
	g.	Duration factor/duty	40 % CDF / S-4			
	h.	Speed (rpm)	*			
	i.	Class of insulation	Class 'F' for sq. cage motors with temp rise limited 70^0 C.			
	j.	Number of starts/ hour	150 starts / hr			
	k.	Contactors for motor	*			
	l.	Overload protection for motors provided	Yes			
3.18.3		Space heater requirement	For motors of rating 30 KW and above			
3.19.0		**Limit switches**	**Main hoist**	**Aux. hoist**	**Cross Travel**	**Long Travel**
	a.	Type	Rotary gear + Gravity		Two way lever type/ One way lever type	

	b.	Number provided	1 + 1	1 + 1	1/2	1/2
	c.	Rating of contacts	*			
	d.	Material of contacts	Double break Silver Cadmium			
	e.	Control voltage	110V			
3.20.0		**Power conductors (DSL)**	**Cater to all cranes working simultaneously with 40% cyclic duration factor for load.**			
	a.	Type	LT: PVC shrouded conductor bus bar. CT: Flexible trailing cable ERP insulated Cu conductor as per IS: 9968			
	b.	Size	Shall be sized with a margin of 10% over load requirement. Voltage drop at motor terminal shall be limited to 2% at extreme positions of cranes. Protective cover over DSL to be provided.			
	c.	Material	*			
	d.	Numbers	*			
	e.	Length	Suitable for bay length			
3.21.0		**Protective Panel**	Shall be provided with isolating switch, power contactor control and indication to switch ON/OFF power to starter panels, control and lighting transformer.			
	a.	Make	OEM			
	b.	Size	*			
	c.	Material	Sheet steel 2 mm size			
	d.	Numbers and location	One number located in bridge platform			
	e.	DOP	IP 54			
3.22.0		**Control panel**				
	a.	Make	OEM			
	b.	Size	*			
	c.	Material	Rolled sheet steel 2mm size			
	d.	Numbers and location	One each for MH, AH, CT and LT located on bridge platform with space heaters.			
	e.	Degree of protection	IP 54			
3.23.0		**Master Controllers (Desk Type)**	**Main Hoist**	**Aux Hoist**	**Cross Travel**	**Long Travel**
	a.	Number of steps	5	5	4	4
	b.	Voltage & current rating	10 A, 415 V			

	c.	Type	Heavy duty type having DOP IP54. Release of operators' hand from the controls shall stop motion and set brakes automatically.	
	d.	Location	In cabin	
3.24.0		**Control for Hoists /CT/LT operations**	Through Variable Voltage Variable frequency drive	
	a.	Speed control	Thru' VVVF with minimum 6 pulse design	
	b.	Starting torque of VVVF	Up to 400 % typical with encoder	
	c.	Starting current	Less than 150 % of rated torque.	
	d.	Temperature	VVVF system shall be capable of withstanding upto 50 ^{o} C without derating.	
3.25.0		**Additional Operation**	**Through Radio remote control**	
	a.	Type	Microprocessor based digital technology	
	b.	Communication	Should communicate up to 100 m approx.	
	c.	Operation	Main controls thru' single joystick movement or double joystick movement type stepped control with spring return. The Micro control should be toggle switch or push control type.	
	d.	Local unit	One local unit (receiver side) with selector switch for operation either from cabin or radio remote unit.	
3.26.0		**Cable**	**Power**	**Control**
	a.	Material	Copper / Aluminium	Copper
	b.	Type	Extruded PVC insulated	
	c.	Size	Min 2.5 mm^2 for copper Min. 4 mm^2 for Aluminium	Min 2.5 mm^2
	d.	Voltage grade	1100 V	
	e.	Voltage drop	Cable from main isolating switch (1.5M above operating floor) to motor terminal shall be so sized that the voltage drop does not exceed 2% of rated voltage with cranes at extreme position.	
3.27.0		**Earthing**		
	a.	Material of earthing	G.I / Copper	
	b.	Earthing as per specification	Yes	
3.28.0	a.	**Contactors**	AC 4 duty for reversing application. AC 3 duty for non reversing application	
	b.	**Switches**	AC 23 for motor application, AC 22 for other application.	
	c.	**Fuses**	HRC	
	d.	**Overload relay**	Temperature compensated bi metallic with single phasing preventor.	

3.29.0		**Power supply**	Owner shall provide two (2) nos. 415 V, 3 phase, 4 wire supply at operating floor near A row column at centre of bay length shall be provided. Bidder shall provide change over switch in enclosure to receive above power supply.
3.30.0		**Transformer**	Dry type with insulation class B or better
	a.	Quantity	2 X 100 % for control , 1 no for lighting & 1 no for hand lamp.
	b.	Voltage Rating	Control 415/110V , Lighting 415/240V and hand lamp 415/24V.
	c.	KVA rating	20% over loading to be considered while sizing the rating
3.31.0		**Illumination**	
	a.	In cabin	40W florescent tube + Bulk head fitting with 60W incandescent lamp – 1 each 2 nos. 24V - 5A - 3 pin industrial socket
	b.	Over Bridge	4 nos 60 W bulk head fittings with fluorescent lamps and 4 nos 24V-5A-3 pin industrial socket.
	c.	Under bridge	4 nos 250 W HPSV lamps
	d	For inspection of crane components	One (1) portable 40 W hand lamp with min. half span length flexible cable for inspection of crane components
3.32.0		**Fire Extinguisher**	
	a.	Type and size	4.5 kg CO_2 type
	b.	Location	One in cabin and Three on bridge
3.33.0		**Ventilation**	One non oscillating ventilating electric fan in cabin.
3.34.0		**Whether tandem operation required**	**Required**
3.35.0		**Lifting beam and string for tandem operation**	**Required. Lifting beam shall be with swivelling arrangement.**

Note : Other requirements for the system.

- Suitable anti- collision devices of the two cranes along with stoppers at both gable ends.
- Centralized grease lubrication with hand operated grease pump for all bearings.
- Two (2) nos isolating switches in enclosure shall be provided at extreme ends of operating floor for disconnecting supply to DSL during crane maintenance.
- Mechanical overload protection shall be ensured for hoist mode.
- The crane electricals shall be designed for ambient air temperature of 50 Deg. C relative humidity of 95% (at 45 deg C). The equipment shall operate in highly polluted environment.
- All electrical equipment, accessories and wiring shall have tropical protection involving special treatment of insulation and metal against fungus, insects and corrosion.
- Emergency Switch-Mushroom type emergency STOP push buttons to open the main contactor shall be furnished at least one in operator's cabin and two on bridge platform within easy reach.

- During tandem operation one crane shall act as master and other as slave.
- DSL phase indicating lamps to be provided.
- Pull out torque of motor at rated voltage shall be 275% of full load torque.
- During tandem operation the maximum difference between lift of the two cranes shall not be more than 200mm.Controls with suitable equipment/s shall be designed to indicate the level difference(to be provided on the lifting beam), which visible from the ground level the and it shall cut off the power in such case. A limit switch shall be provided to give alarm at the cabin to enable the operator to control the level difference with the limit.
- Two nos (for each crane) fail safe LT storm/parking brakes , truck end mounted , hydraulic rail clamp type of adequate capacity (depending on wind pressure) to be provided. The setting shall include automatic engagement of clamps in case of crane is left idle for five minutes (adjustable).
- Lifting beam shall be sized 5% over the heaviest piece lifted by lifting beam i.e. Stator (326T) in line with sizing of main crane. Lifting beam capacity shall be 343T (min).
- Lifting beam testing at works- Load testing of lifting beam shall be carried out at manufacturers work prior to dispatch and also during PG testing of cranes at site. Write-up on Load Testing Lifting Beam Testing at Manufacturer's Works along with reference MQP for lifting beam is attached. Bidder to comply the same.
- The following parameters shall be considered for design and selection of LT storm /parking brakes. The various design parameters, as defined in IS: 875 (Part-3), to be adopted for the project site shall be as follows
  a) The basic wind speed "Vb" at ten metres above the mean ground level: 47 meters /second
  b) The risk coefficient "K1" 1.07
  c) Category of terrain Category-2
  d) Other factors in line with IS 875.

Note: Notwithstanding the values of the above mentioned parameters, the design wind pressure so computed at any point shall not be taken less than 1500 N/Sq. metre for all classes of structures, i.e. A, B & C, as defined in IS: 875 (Part-3).

PRODUCED BY AN AUTODESK EDUCATIONAL PRODUCT

ALL DIMENSIONS ARE IN MM

FIRST ANGLE PROJECTION

THIS IS A PART OF TECHNICAL SPECIFICATION
PE-TS-387-501-A001

DRAWING No.

CUSTOMER'S DRAWING No.

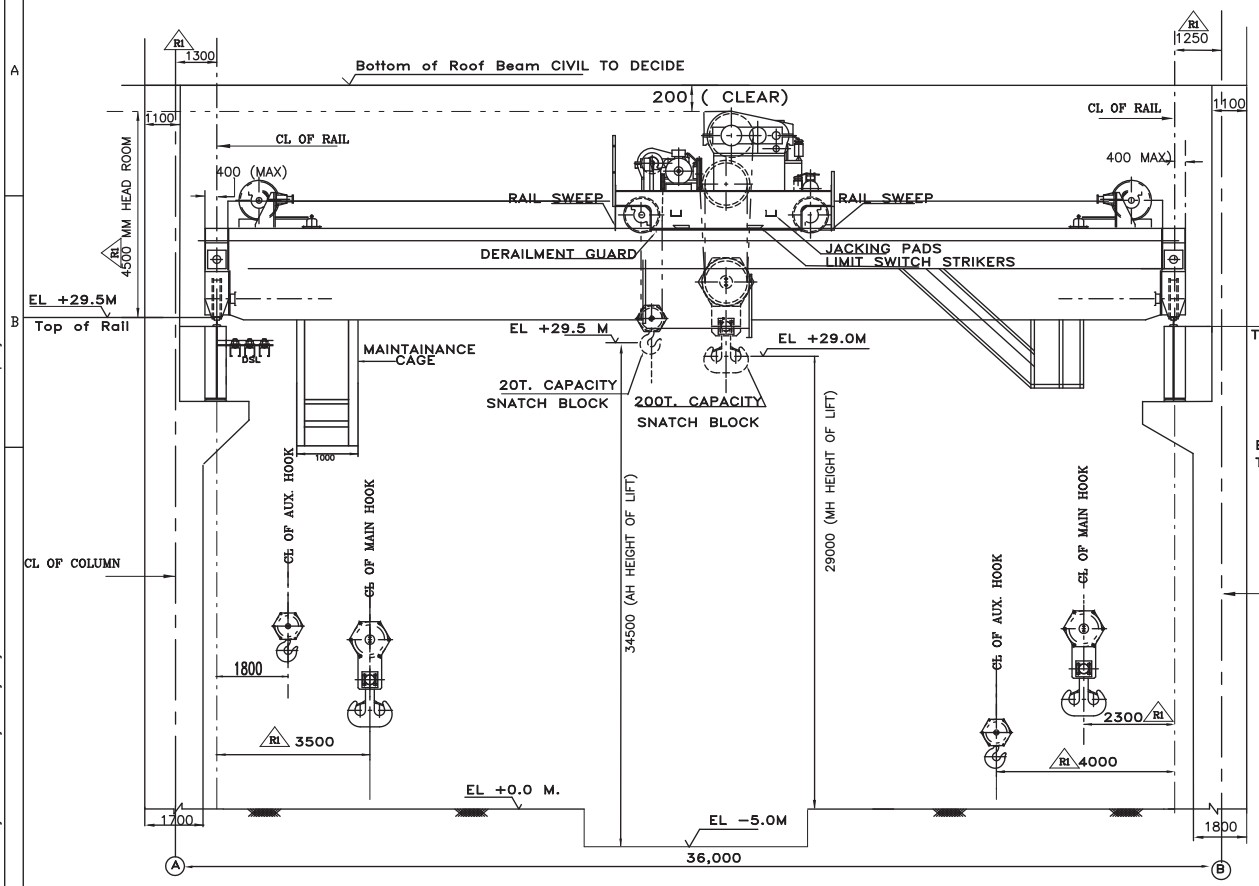

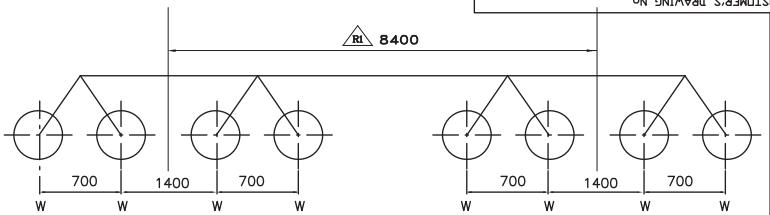

TENTATIVE LT WHEEL LOAD DIAGRAM WITHOUT IMPACT

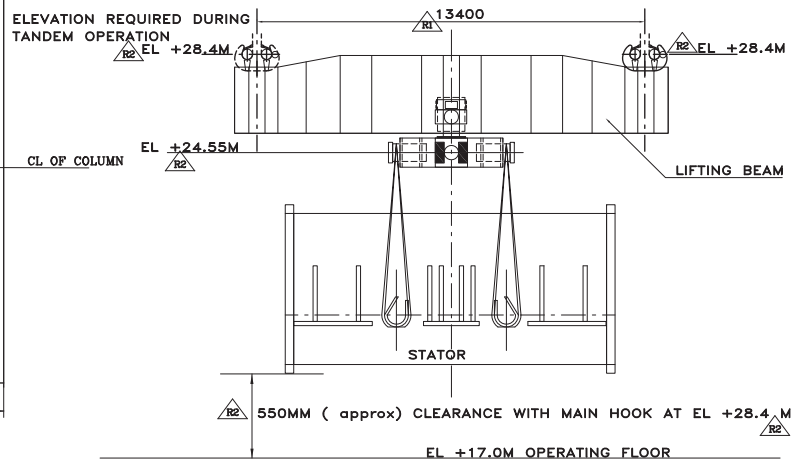

CRANE WEIGHT (INCLUDING CRAB) = 210T (APPROX)

CRAB WEIGHT = 65T (APPROX)

NOTE

1. Lifting beam shall be sized 5% over the heaviest piece lifted by lifting beam i.e Stator (326T) in line with sizing of main crane. Thus Lifting beam shall be sized for 343T (approx.).
2. Maximum weight of lifting beam shall be not more than 40T.

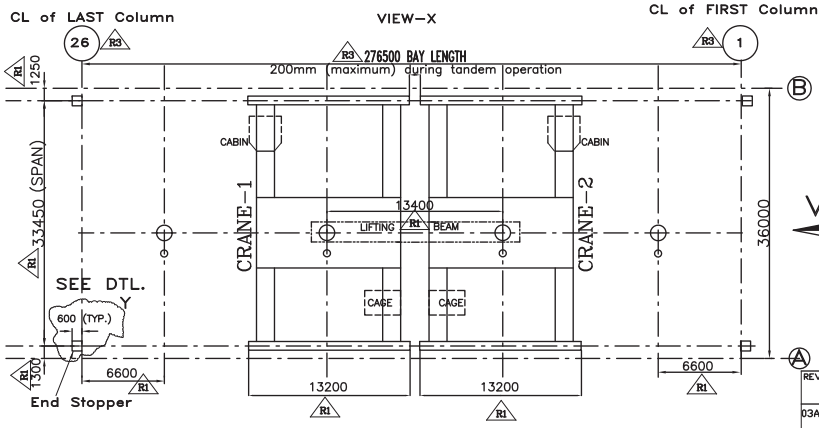

KEY PLAN

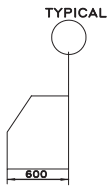

DETAIL 'Y'

NTPC DRG NO	9575-110-PE-PVM-B-1779
OWNER	NTPC LTD
STATUS CONTRACT DRG./REF. NO. (INTERNAL)	MOUDA SUPER THERMAL POWER PLANT (2 X 660 MW)
PRINT SCALE	BHARAT HEAVY ELECTRICALS LTD POWER SECTOR PROJECT ENGINEERING MANAGEMENT NEW DELHI
SUB-CONTRACTOR	
TITLE	CRANE CLEARANCE DIAGRAM OF TG HALL 200/20T (DOUBLE GIRDER) E.O.T. CRANES IN TANDEM OPERATION

DEPT CODE	NAME	SIGN	DATE
DRN	VVH		08.05.2012
DESN	VVH		08.05.2012
CHD	VK		08.05.2012
APPD	SKB		08.05.2012

REV.	DATE	ALTD	CHD	APPD	REV.	DATE	ALTD	CHD	APPD
03A	26.10.12	VVH	GB	SKB	03	10.09.12	VVH	SKB	SKB
	REVISED AS PER NTPC'S COMMENTS DTD 21.09.12					REVISED AS PER NTPC'S COMMENTS DTD 13.08.12			
02	31.07.12	VVH	SKB	SKB	01	11.07.12	VVH	SKB	SKB
	REVISED AS PER NTPC'S COMMENTS VIDE MAIL DTD DTD 17/07					REVISED AS PER NTPC'S COMMENTS DTD 21/06 , 29/06 AND MOM DTD DTD 10/07			

DEPT. SCALE SIGN DATE

BHEL DRG NO : PE-DG-387-501-A001

SHEET 1 OF 1 REV 03A.

SIZE-A2

COPY RIGHT AND CONFIDENTIAL
The information on this document is the property of BHARAT HEAVY ELECTRICALS LIMITED
It must not be used directly or indirectly in any way detrimental to the interest of the company.

COMPUTER FILE NAME : TAL5

PRODUCED BY AN AUTODESK EDUCATIONAL PRODUCT

	SCHEDULE OF DEVIATION TECHNICAL SPECIFICATION DOUBLE GIRDER EOT CRANE 2 X 660 MW MOUDA SUPER THERMAL POWER PROJECT,STAGE II	SPECIFICATION NO.: PE-TS-387-501-A001 VOLUME III SHEET OF

( ) From general terms and conditions of contract and special condition of contract (Vol. I)
( ) From technical specifications (Vol. II B)
( ) From general terms and conditions of contract for erection (vol. I)
( ) From general technical conditions (Vol. IIC)

Note: Each type of deviation shall be listed on a separate sheet.

We the undersigned hereby certify that the above-mentioned information's are the ONLY deviations.

PARICULARS OF BIDDER / AUTHORISED REPRESENTATIVE			
NAME	DESIGNATION	SIGN DATE	COMPANY SEAL

S.N.	ITEM	UNIT OF MEASUREMENT	GURANTEED VALUE

We the undersigned hereby undertake to meet the performance guarantees as listed in the table above on the conditions as elsewhere specified. Any variation of the specified conditions during official test will be taken in to account by the customer.

PARICULARS OF BIDDER / AUTHORISED REPRESENTATIVE			
NAME	DESIGNATION	SIGN DATE	COMPANY SEAL

SCHEDULE OF EQUIPMENT MANUFACTURE DESPATCH TO SITE TECHNICAL SPECIFICATION – DOUBLE GIRDER EOT CRANE 2 X 660 MW MOUDA SUPER THERMAL POWER PROJECT,STAGE II	SPECIFICATION NO.: PE-TS-387-501-A001
	VOLUME III PART 'A'
	SHEET OF

S.N.	Equipment / Major Bought out Items	Time for manufacture/procurement from date of issue of letter of intent (weeks)	Time for test, dismantling, packing & ready for dispatch (weeks)	Time required for shipment to site (weeks)	Total time from date of issue of letter of intent to shipment to site (weeks)

Particulars of Bidders / Authorized Representative			
Name	Designation	Sign Date	Company seal

( ) From general terms and conditions of contract and special condition of contract (Vol. I)
( ) From technical specifications (Vol. II B)
( ) From general terms and conditions of contract for erection (vol. I)
( ) From general technical conditions (Vol. IIC)

PARICULARS OF BIDDER / AUTHORISED REPRESENTATIVE			
NAME	DESIGNATION	SIGN DATE	COMPANY SEAL

ELECTRICAL REQUIREMENT FOR DOUBLE GIRDER EOT CRANES

In case of discrepancy between the Electrical Portion and reqirement given elsewhere the more stringent of the two as per the interpretation of purchaser shall be applicable.

ELECTRICAL SCOPE BETWEEN BHEL AND VENDOR

PROJECT: 2 x 660 MW MOUDA STPP STAGE II

PACKAGE: TG HALL DOUBLE GIRDER EOT CRANES

S. NO	DETAILS	SCOPE SUPPLY	SCOPE E&C	REMARKS
1	415V Local Starter Panel	Vendor	Vendor	BHEL will provide incoming 415 V supply to the bidders' isolating /change over switch located at 1.5m height from operating floor. Cable from BHEL's supply feeder to vendors isolating switch shall be in BHEL's scope.
3	Power cables, ordinary control cables and screened control cables between equipment supplied by vendor.	Vendor	Vendor	Any special cable required will be in bidders scope. Cables, cable trays, conduits & cabling etc for the system by Vendor.
4	Equipment Earthing	Vendor	Vendor	All equipments metallic enclosures / frames, metal structure etc. shall be grounded at two points each to the nearest grounding points / risers provided by BHEL/Customer .
5	Motors	Vendor	Vendor	
6	Cable glands and lugs for equipment supplied by vendor	Vendor	Vendor	

NOTE: ALL CABLE WIRING FROM VENDORS ISOLATING /CHANGEOVER SWITCH TO THE CRANE/S SHALL BE IN VENDOR'S SCOPE.

1.0 EQUIPMENT & SERVICES TO BE PROVIDED BY BIDDER:

a) Services and equipment as per "Electrical Scope between BHEL and Vendor".

b) Any item/work either supply of equipment or erection material which have not been specifically mentioned but are necessary to complete the work for trouble free and efficient operation of the plant shall be deemed to be included within the scope of this specification. The bidder without any extra charge shall provide the same.

c) Supply of mandatory spares as specified in the specifications of mechanical equipments.

d) Erection and commissioning spares.

e) Erection & Maintenance tools & tackles.

f) Electrical load requirement for CRANES.

g) All equipment shall be suitable for the power supply fault levels and other climatic conditions mentioned in the enclosed project information.

h) Bidder to furnish list of makes for each equipment at contract stage, which shall be subject to customer /BHEL approval without any commercial and delivery implications to BHEL.

i) Various drawings, data sheet as per required format, quality plans, calculations, test reports, test certificates, operation and maintenance manuals etc shall be furnished as specified at contract stage. All documents shall be subject to customer /BHEL approval without any commercial implications to BHEL.

j) Motor shall meet minimum requirement of motor specification.

k) Earthing.

2.0 EQUIPMENT & SERVICES TO BE PROVIDED BY PURCHASER FOR ELECTRICAL & TERMINAL POINTS:

Refer "Electrical Scope between BHEL and Vendor".

3.0 DOCUMENTS TO BE SUBMITTED ALONG WITH BID

3.1 No technical submittal such as copies of data sheets, drawings, write-up, quality plans, type test certificates, technical literature, etc, is required during tender stage. Any such submission even if made, shall not be considered as part of offer.

4.0 LIST OF ENCLOSURES

4.1 Electrical scope between BHEL & vendor.

4.2 Technical specification, Data Sheets (A & C) for 415V Electric Motors.

4.3 Power cables and control cables specification & datasheets.

4.4 Cabling earthing & lightning protection specification & data sheets.

GENERAL TECHNICAL REQUIREMENTS

FOR

LV MOTORS

1.0 INTENT OF SPECIFIATION

The specification covers the design, materials, constructional features, manufacture, inspection and testing at manufacturer's work, and packing of Low voltage (LV) squirrel cage induction motors along with all accessories for driving auxiliaries in thermal power station.

Motors having a voltage rating of below 1000V are referred to as low voltage (LV) motors.

2.0 CODES AND STANDARDS

Motors shall fully comply with latest edition, including all amendments and revision, of following codes and standards:

IS:325	Three phase Induction motors
IS : 900	Code of practice for installation and maintenance of induction motors
IS: 996	Single phase small AC and universal motors
IS: 4722	Rotating Electrical machines
IS: 4691	Degree of Protection provided by enclosures for rotating electrical machines
IS: 4728	Terminal marking and direction of rotation rotating electrical machines
IS: 1231	Dimensions of three phase foot mounted induction motors
IS: 8789	Values of performance characteristics for three phase induction motors
IS: 13555	Guide for selection and application of 3-phase A.C. induction motors for different types of driven equipment
IS: 2148	Flame proof enclosures for electrical appliance
IS: 5571	Guide for selection of electrical equipment for hazardous areas
IS: 12824	Type of duty and classes of rating assigned
IS: 12802	Temperature rise measurement ofr rotating electrical machnines
IS: 12065	Permissible limits of noise level for rotating electrical machines
IS: 12075	Mechnical vibration of rotatinf electrical machines

In case of imported motors, motors as per IEC-34 shall also be acceptable.

3.0 DESIGN REQUIREMENTS

3.1 Motors and accessories shall be designed to operate satisfactorily under conditions specified in data sheet-A and Project Information, including voltage & frequency variation of supply system as defined in Data sheet-A

3.2 Motors shall be continuously rated at the design ambient temperature specified in Data Sheet-A and other site conditions specified under Project Information
Motor ratings shall have at least a 10% margin over the continuous maximum demand of the driven equipment, under entire operating range including voltage & frequency variation specified above.

3.3 Starting Requirements

3.3.1 Motor characteristics such as speed, starting torque, break away torque and starting time shall be properly co-ordinated with the requirements of driven equipment. The accelerating torque at any speed with the minimum starting voltage shall be at least 10% higher than that of the driven equipment.

3.3.2 Motors shall be capable of starting and accelerating the load with direct on line starting without exceeding acceptable winding temperature.

The limiting value of voltage at rated frequency under which a motor will successfully start and accelerate to rated speed with load shall be taken to be a constant value as per Data Sheet - A during the starting period of motors.

3.3.3 The following frequency of starts shall apply

i) Two starts in succession with the motor being initially at a temperature not exceeding the rated load temperature.

ii) Three equally spread starts in an hour the motor being initially at a temperature not exceeding the rated load operating temperature. (not to be repeated in the second successive hour)

iii) Motors for coal conveyor and coal crusher application shall be suitable fro three consecutive hot starts followed by one hour interval with maximum twenty starts per day and shall be sutable for mimimum 20,000 starts during the life time of the motor

3.4 **Running Requirements**

3.4.1 Motors shall run satisfactorily at a supply voltage of 75% of rated voltage for 5 minutes with full load without injurious heating to the motor.

3.4.2 Motor shall not stall due to voltage dip in the system causing momentary drop in voltage upto 70% of the rated voltage for duration of 2 secs.

3.5 **Stress During bus Transfer**

3.5.1 Motors shall withstand the voltage, heavy inrush transient current, mechnical and torque stress developed due to the application of 150% of the rated voltage for at least 1 sec. caused due to vector difference between the motor residual voltage and the incoming supply voltage during occasional auto bus transfer.

3.5.2 Motor and driven equipment shafts shall be adequately sized to satisfactorily withstand transient torque under above condition.

3.6 Maximum noise level measured at distance of 1.0 metres from the outline of motor shall not exceed the values specified in IS 12065.

3.7 The max. vibration velocity or double amplitude of motors vibration as measured at motor bearings shall be within the limits specified in IS: 12075.

4.0 **CONSTRUCTIONAL FEATURES**

4.1 Motors shall conform to degree of protection IP: 55 as per IS: 4691. shall be of weather-proof construction.

4.2 Motors upto 160KW shall have Totally Enclosed Fan Cooled (TEFC) enclosures, the method of cooling conforming to IC-0141 or IC-0151 of IS: 6362.

Motors rated above 160 KW shall be Closed Air Circuit Air (CACA) cooled

4.3 Motors shall be designed with cooling fans suitable for both directions of rotation.

4.4. Motors shall not be provided with any electric or pneumatic operated external fan for cooling the motors.

4.5 Frames shall be designed to avoid collection of moisture and all enclosures shall be provided with facility for drainage at the lowest point.

4.6 In case Class 'F' insulation is provided for LV motors, temperature rise shall be limited 70 deg C. In case of continuous operation at extreme voltage limits the temperature limits specified in table-1 of IS:325 shall not exceed by more than 10°C.

4.7 **Terminals and Terminal Boxes**

4.7.1 Terminals, terminal leads, terminal boxes, windings tails and associated equipment shall be suitable for connection to a supply system having a short circuit level, specified in the Data Sheet-A.

Unless otherwise statedin Data Sheet-A, motors of rating 110 kW and above will be controlled by circuit breaker and below 110 kW by switch fuse-contactor. The terminal box of motors shall be designed for the fault current mentioned in data sheet "A".

4.7.2 Unless otherwise specified or approved, phase terminal boxes of horizontal motors shall be positioned on the left hand side of the motor when viewed from the non-driving end.

4.7.3 Connections shall be such that when the supply leads R, Y & B are connected to motor terminals A B & C or U, V & W respectively, motor shall rotate in an anticlockwise direction when viewed from the non-driving end. Where such motors require clockwise rotation, the supply leads R, Y, B will be connected to motor terminals A, C, B or V W & V respectively.

4.7.4 Permanently attached diagram and instruction plate made preferably of stainless steel shall be mounted inside terminal box cover giving the connection diagram for the desired direction of rotation and reverse rotation.

4.7.5 Motor terminals and terminal leads shall be fully insulated with no bar live parts. Adequate space shall be available inside the terminal box so that no difficulty is encountered for terminating the cable specified in Data Sheet-A.

4.7.6 Degree of protection for terminal boxes shall be IP 55 as per IS 4691.

4.7.7 Separate terminal boxes shall be provided for space heaters.. If this is not possible in case of LV motors, the space heater terminals shall be adequately segregated from the main terminals in the main terminal box. Detachable gland plates with double compression brass glands shall be provided in terminal boxes.

4.7.8. Phase terminal boxes shall be suitable for 360 degree of rotation in steps of 90 degree for LV motors.

4.7.9 Cable glands and cable lugs as per cable sizes specified in Data Sheet-A shall be included. Cable lugs shall be of tinned Copper, crimping type.

4.8 Two separate earthing terminals suitable for connecting G.I. or MS strip grounding conductor of size given in Data Sheet-A shall be provided on opposite sides of motor frame. Each terminal box shall have a grounding terminal.

4.9 **General**

4.9.1 Motors provided for similar drives shall be interchangeable.

4.9.2 Suitable foundation bolts are to be supplied alongwith the motors.

4.9.3 Motors shall be provided with eye bolts, or other means to facilitate safe lifting if the weight is 20Kgs. and above.

4.9.4 Necessary fitments and accessories shall be provided on motors in accordance with the latest Indian Electricity rules 1956.

4.9.5 All motors rated above 30 kW shall be provided with space heaters to maintain the motor internal air temperature above the dew point. Unless otherwise specified, space heaters shall be suitable for a supply of 240V AC, single phase, 50 Hz.

4.9.6 Name plate with all particulars as per IS: 325 shall be provided

4.9.7 Unless otherwise specified, the colour of finish shall be grey to Shade No. 631 and 632 as per IS:5 for motors installed indoor and outdoor respectively. The paint shall be epoxy based and shall be suitable for withstanding specified site conditions.

5.0 INSPECTION AND TESTING

5.1 All materials, components and equipments covered under this specification shall be procured, manufactured, as per the BHEL standard quality plan.

5.2 LV motors of type-tested design shall be provided. Valid type test reports not more than 5 year shall be furnished. In the absence of these, type tests shall have to be conducted by manufacturer without any commercial implication to purchaser.

5.3 All motors shall be subjected to routine tests as per IS: 325 and as per BHEL standard quality plan.

5.4 Motors shall also be subjected to additional tests, if any, as mentioned in Data Sheet A.

6.0 DRAWINGS TO BE SUBMITTED AFTER AWARD OF CONTRACT

a) OGA drawing showing the position of terminal boxes, earthing connections etc.
b) Arrangement drawing of terminal boxes.
c) Characteristic curves:
(*To be given for motor above 55 kW unless otherwise specified in Data Sheet*).

i) Current vs. time at rated voltage and minimum starting voltage.
ii) Speed vs. time at rated voltage and minimum starting voltage.
iii) Torque vs. speed at rated voltage and minimum voltage.
For the motors with solid coupling the above curves i), ii), iii) to be furnished for the motors coupled with driven equipment. In case motor is coupled with mechanical equipment by fluid coupling, the above curves shall be furnished with and without coupling.
iv) Thermal withstand curve under hot and cold conditions at rated voltage and max. permissible voltage.

GENERAL TECHNICAL REQUIREMENTS

OF

PVC POWER AND CONTROL CABLES

1.0 GENERAL

1.1 This section cover the specification, which are applicable in general to PVC insulated, PVC sheathed Power and control cables.

1.2 Specific requirements of cables as applicable to the project are given in Data Sheet - A of this section.

2.0 STANDARDS

The cable shall conform to the latest edition of following standard in general.

IS : 1554 Part - I PVC insulated (Heavy duty) Electric Cables

(For working voltage upto and including 1100V)

Other Standards are listed in Subsequent clauses.

3.0 DESIGN REQUIREMENTS

3.1 Cables shall be suitable for laying in metal trays, racks, conduits, ducts or for direct burial in ground both in wet and dry conditions.

3.2 As applicable to 'FRLS' cables, the overall serving (outer sheath) of the cables shall be of flame retardant low smoke (FRLS) type PVC material.

3.3 Cable shall be capable of operating satisfactorily under the power supply and frequency variations as specified under 'Project information' in Section-B.

4.0 CONSTRUCTION

4.1 Cable construction shall generally conform to the latest edition of applicable standard. For specific requirements refer DATA SHEET-A enclosed.

4.2 Identification marks on cable

The following particulars shall be embossed on the outer sheath at intervals of one meter throughout the length of cables.

i) Manufacturer's name and/or trade name.

ii) Year of manufacture

iii) Type of cable and the voltage class.

iv) Nominal cross sectional area of conductor and number of cores

v) Letter HR in case of HR PVC insulated cables.

vi) Letter FRLS Applicable in case of FRLS cables.

5. CORE IDENTIFICATION

5.1 Power Cables

Power cables shall be colour coded for more identification as per IS : 1554, (Part-I)

5.2 Control Cables

a) Control cables upto 5 crores shall be colour coded as per IS : 1554, (Part-I)

b) Control cables having more than 5 cores shall have core identification by numbering as per IS : 1554 (Part-I)

6.0 PACKING & MARKING

6.1 Cables shall be supplied in non-returnable drums. The drums shall be of heavy construction. All wooden parts shall be manufactured from durable quality wood duly seasoned and treated with copper Nephthenat or Zinc Nephthenates for preserving the wood (ref. IS : 401). All ferrous parts shall be treated with suitable rust protective finish or coating to avoid rusting during transit and storage.

6.2 Cable shall be wound and packed on drums in such a manner that it will be protected from injury during transit. Each end of the cables shall be properly sealed and firmly secured to the drum. The ends of each length, shall be capped by special PVC/rubber cap and end embedded in the cable drum flange. The embedded cable ends in drum flange shall be covered by metal sheet.

6.3 The standard drum lengths shall be as indicated in Data Sheet-A

6.4 The tolerance on the dispatched cable length on each drum verified and accepted by Inspector shall be limited to ± 5% of the standard drum length, however the overall tolerance on the total dispatched of quantity of each size shall be ± 5%. Cables consumed for testing & inspection will be to bidder's account.

6.5 Short lengths, if offered, shall be considered for acceptance provided that

i) No single piece is less than 200 M in length.
ii) Cumulative of pieces in each size is with in 5% of the ordered quantities.

6.6 A layer of water proofed paper shall be applied to the surfaces of the drum and over the outer cable layer.

6.7 A clear space of min. 40 mm shall be left between the cables and logging.

6.8 A label shall be securely attached to each end of reel indicating the Purchaser's order number, length, type, voltage, grade, conductor size and number of cores of the cable. A tag containing the same information shall be attached to the leading end of the cable inside.

6.9 BIS Certification mark shall be stamped on each cable drum.

7.0 INSPECTION & TESTING QUALITY ASSURANCE

7.1 All materials components covered under this specification shall be procured, manufactured, inspected & tested as per BHEL standard quality plan enclosed with the specification, which shall be complied. Bidder is to put his seal of acceptance on this quality plan without making any

alterations and return the same along with the bid, In case of any comments or deviations, the same are to be furnished in the form of a separate annexure.

7.2 The type, routine and acceptance tests shall be witnessed by inspection agency on one sample for each type as per applicable standards. The sample shall be drawn at the rate of one per type and size for every lot offered for inspection.

7.3 All testing instruments shall be periodically calibrated and calibration certificates shall be shown.

7.4 Special Tests

The following tests as applicable to 'FRLS' cable shall be conducted as type test on each size of each lot to establish the 'FRLS' characteristics of PVC material as applicable to inner sheath/outer sheath of finished cables :

Value for each test shall be as per Data Sheet-A.

a) Oxygen Index Test : This test shall be carried out as per ASTM-D-2863 at room temperature ($27^{o}C$).

b) Temperature Index Test : The test shall be carried out as per ASTM-D-2863 for normal atmospheric oxygen (21% by volume).

c) Acid gas Generation during Fire : The test shall be carried out as per IEC-754-1

d) Smoke Generation Test Under Fire : The test shall be carried out as per ASTM-D-2863.

e) Flammability Test : All finished cables shall pass the following tests :

i) Under fire conditions as per IEC-332-1.

ii) Swedish Chimney test for Class F3 as per SS:424:1475.

iii) Under fire conditions for bunched cables as per IEEE Std. 383/74 (test set up should have cables having at least 10 kg organic material per metre run)

7.5 The cable materials shall also pass the following additional type tests.

a) Heat shock test as per IS : 5831

b) Loss of mass test as per IS : 5831

c) Thermal heat stability test as per IS : 5831

d) Anti termite & antirodent test (on outersheath)

8.0 DRAWINGS, DATA & DOCUMENTS REQUIRED

The following information shall be furnished with technical bid

a) Catalogue, cross-sectional drawings.

b) Filled up schedule as per volume III including Data Sheet-B.

c) Quality plan with seal of acceptance

d) Unfilled price schedule.

8.2 The following information shall be furnished within two weeks after award of contract, for purchaser's approval.

a) Data Sheet-C

b) Manufacturing drawings/details

c) Recommended field quality plan covering site handling, storing, laying, testing etc.

d) Final quality plan

e) Packing drawing

f) Bar chart

g) Billing schedule

h) Derating factors

i) For variation in ambient air temperature from 30 degree C to 50 degree C in steps of 5 degree C.

ii) For variation in ground temperature from 25 degree C to 50 degree C in steps of 5 degree C.

iii) Group derating factors for various configurations of cables laid in overhead trays, trenches, ducts, pipes, directly buried in ground.

iv) For variation in thermal resistivity of soil in the range of 600 mm to 1500 mm.

8.3 The following information shall be furnished after testing and inspection.

Requisite copies of Type test, special test, routine and acceptance test in bound volume.

GENERAL TECHNICAL REQUIREMENTS

FOR

CABLING INSTALLATION

1.0 **INTENT OF SPECIFICATION**

1.1 This specification covers the activities mentioned below, as applicable to various areas of power station:

a) Laying and termination of cables
b) Testing and charging of cables
c) Supply and erection of miscellaneous items for completion of the cabling system
d) All associated work for completion of cabling system
e) Receipt of cables and cabling materials supplied by purchaser/others
f) Site handling and storage of material
g) Minor civil works

1.2 The scope of supply of cabling materials as a part of cable installation work includes supply of all accessories including, but not limited to, cable clamps, ferrules, cable tags, nuts, bolts, and consumables like anti-corrosive paints, welding electrodes etc. required to complete the cabling system. All other sundry materials for minor civil work shall also be supplied by vendor.

1.3 WORKS EXCLUDED FROM VENDOR'S SCOPE

a) Major civil works like excavation and concreting of concrete trenches, plate embedments on cable trenches, ceiling and floors.
b) Civil works for ducting for crossing of roads & rail tracks
c) Conduits and pipes embedded in walls, floors etc.

2.0 CODES AND STANDARDS

2.1 Installation of cabling work shall comply with the latest edition of following Indian standards rules, regulations and acts. However, if Data Sheet A specifies conformance to any other international standard, equivalent BS / IEC / ISO / any other standard shall be applicable.

a)	IS:1255 to	Code of practice for installation and maintenance of power cables up to and including 33 kV rating.
b)	IS:732	Electrical wiring installation (system voltage not exceeding 650 V).
c)	IS:5216	Guide for safety procedures and practices in electrical works.
d)	IS:226	Structural steel (Standard Quality).
e)	IS:800	Code of practice for use of structural steel.
f)	IS:316	Code of practice for use of metal arc welding for general construction in mild steel.
g)	IS:1363	Hexagonal bolts, nuts and screws.
h)	IS:1572	Electroplated coatings of cadmium on iron and steel.
i)	IS:2629	Code of practice for hot dip galvanizing for iron and steel.
j)	IS:2633	Method of testing uniformity of coating on zinc coated articles.
k)		Indian Electricity Act
l)		Indian Electricity Rules
m)		Fire insurance regulations.
n)		Regulations laid down by the Chief Electrical Inspector of the State.
o)		Regulations laid down by the Factory Inspector of the State.
p)		Any other regulations laid down by the authorities.

2.2 In case any clause of contradictory nature arises between standards and this specification, the latter shall prevail.

3.0 CABLING MATERIALS TO BE PROVIDED

3.1 Trefoil Cable Clamps shall be provided for clamping single core cables carrying alternating current and shall be of aluminium alloy or nylon material as per Data Sheet A

3.2 Omega Cable Clamps shall be provided to fasten the individual multi-core cable above 35mm outer diameter and shall be of aluminium alloy or mild steel.

3.3 Strip Cable Clamps shall be provided to fasten the group of multi-core cables up to 35mm diameter and shall be of mild steel or aluminium

3.4 Self Locking Clamps shall be shall be provided of nylon material with self locking feature when the cord is looped and shall provided with manual lock release.

3.4 Steel clamps shall be hot dip galvanized as per the requirements given in Data Sheet A.

3.5 Ferrules shall be provided for individual core of control cables and shall be of plastic material.

3.6 Cables shall be provided with cable number tags for identification Cable tags shall be of durable fibre, aluminium or stainless steel sheets as per Data Sheet A.

3.7 Miscellaneous items required for the buried cables such as cable markers, bricks, sand, protective slabs etc. shall be to provided by the vendor.

4.0 CABLING CONCEPT

4.1 In the plant building, substations, switchgear rooms, control rooms etc., power and control cables shall generally be laid on cable trays installed in concrete trenches, tunnels, cable basements, cable vaults, cable shafts or along building and technological structures as the case may be.

4.2 In case of multicore cables of diameter up to 30 mm where not more than 3 cables are taken in one run, these can be taken directly along structures, walkways, platforms, galleries, walls, ceiling etc. by proper clamping at regular intervals of 750 mm or less.

4.3 Power & control cables installed along buildings, structures, ceilings, walls, etc., which are required to be protected against mechanical damage, shall be taken in GI conduits.

4.4 GI Conduits shall also be used for flameproof installations, wherever required, with sealing at both ends.

4.5 Entry of cables from trenches/tunnels into buildings shall be by means method duly approved by purchaser approved, which shall be informed to successful bidder during detailed engg stage.

4.6 Cables laid exposed in racks/trays and routed from trenches/tunnels/basements etc to individual drive/ control devices etc shall be taken in embedded/exposed/surface-grouted rigid GI conduits and / or flexible conduits unless directly terminated to the equipment in the panels located above trenches, tunnels or basement.

4.7 All cables routed along walls or in equipment rooms shall be protected by means of laying them through G.I. pipes or by providing sheet metal covers up to a height of 2000 mm from

the working floor levels and platforms, for protection against mechanical damage. All vertical risers shall be enclosed type.

4.8 For 415 V power wiring in ancillary buildings, offices and laboratories, cables shall be taken through embedded/exposed GI conduits or rigid PVC pipes as applicable.

4.9 Wherever cables are to be laid below roads and railway tracks, the same shall be taken through ducts buried at a suitable depth.

4.10 At certain places where hazardous fumes/gases may cause fire to the cables, cable trenches after installation of cables shall be sand-filled.

4.11 In corrosive atmosphere, Epoxy painted G.I. conduits shall be used for cables.

4.12 Single core cables, when pulled individually, shall be taken through PVC pipes only.

4.13 Cables shall be avoided below oil pipes and near steam pipes.

4.14 Cable installation shall be properly coordinated at site with other services and wherever necessary suitable adjustment shall be made in the cable routings with a view to avoid interference with any part of the building, structures, equipment, utilities and services

4.15 All apparatus, connections and cable work shall be designed and arranged to minimise the risk of fire and ingress of water. All material required to achieve the same shall be included in the cost of installation of cables.

5.0 TRANSPORTATION & STORAGE OF CABLE DRUMS

5.1 Transportation and storage of cable drums shall generally conform to the requirements of IS:1255. The cable drums shall be transported on wheels to the place of work.

5.2 Transportation of all cables, which shall be provided by purchaser as free issue items, from purchaser's storage area to the work site shall be the responsibility of vendor. Empty cable drums shall be returned to purchaser.

6.0 LAYING OF CABLES

6.1 Laying and installation of power, control and special cables shall generally conform to IS: 1255.

6.2 The cables shall be paid-out in proper direction from the cable drums (opposite to the normal direction of rotation for transportation).

6.3 In case of higher size cables, the paid out cables shall run over rollers placed at close intervals and finally transferred carefully on the racks/trays. Care shall be taken so that kinks and twists or any mechanical damage does not occur to cables. Only approved cable pulling grips or other devices shall be used. Under no circumstances cables shall be dragged on ground or along structure while paying out from cable drums, carrying to site and straightening for laying purpose.

6.4 All possible care shall be given while handling un-armoured cables.

6.5 Additional length of power cables of one loop with permissible bending radius shall be provided. For control cables extra length of 1 - 1.5 metre shall be provided.

6.6 The bending radius of various types of cables shall not be less than those specified by cable manufacturers and that specified in IS: 1255.

6.7 All cables shall be provided with identification tags indicating the cable numbers. Tags shall be fixed at both ends of cables, at each bend, and both sides of floor/wall crossings.

6.8 Single core cables for a. c. circuits shall form a complete circuit in trefoil formation supported by means of trefoil clamps of nonmagnetic material.

6.9 Multi-core cables above 1100 V grade shall be generally laid in ladder type trays in one layer with spacing not less than one cable diameter of bigger diameter cable.

6.10 All 1100 V grade multicore power cables and single core DC cables shall be placed in single layer, touching each other and clamped by means of single or multiple galvanized MS saddles/ aluminium strips/ nylon cable ties as specified in Data Sheet A. Cables above 35mm outer diameter shall be clamped individually.

6.11 Control cables shall be laid touching each other and may not preferably be taken in more than two layers.

6.12 Segregation of the cables based on their types and their functions shall be as under for horizontal formations:

a) HT cables shall be laid in the top tier(s).
b) LT power cables to be laid in the tray(s) below the HT cable trays.
c) LT control cables to be laid in the tray(s) next below to the LT power Cable tray(s).
d) Special control cables including screened control cables to be laid in the bottom most tray(s).

6.13 For vertical formations, the tray closest to the wall shall be considered as bottom most tray and the order indicated in clause just above shall be followed.

6.14 When it may not be possible to accommodate cables as per the criteria indicated in the clauses 6.12 & 6.13 above, the following rules in hierarchical order shall override the criteria:

a) Control cables are mixed up with the special control cables with clear minimum gap of 100mm between them.
b) LT power cables are mixed up with control cables with clear minimum gap of 150mm between them.
c) LT power cables are mixed up with HT power cables with clear minimum gap of 200mm between them.

However, under no circumstances HT power cables can be mixed up with control cables of any type.

6.15 For laying cables along building steel structures and technological structures, the cables shall be taken by clamping with MS saddles screwed to the MS flats welded to the structure. MS saddles and flats shall be galvanized.

6.16 For laying cables along concrete walls, ceilings etc., the cables shall be taken by clamping with MS saddles screwed to the MS flats welded on the inserts. Where inserts are not available the saddles shall be directly fixed to the walls using rawl plugs and MS flat spacers of minimum 6mm thickness.

6.17 To facilitate pulling of cables in GI conduits, powdered soft stone, plastic soap or other dry inert lubricant may be used but grease or other material harmful to the cable sheaths shall not be used.

6.18 No single core cable shall pass through a GI conduit or duct singly except DC single core cables. AC single core cables shall pass through GI conduits/pipes in trefoil formation only.

6.19 Entry of cables from underground trenches to the buildings or tunnels shall be by some approved method. Necessary precautions shall be taken to make the entry point fully water tight by properly sealing the pipe sleeves wherever they enter directly into the building at trench level. The sealing shall be by cold setting compound. Any alternative sealing arrangement may be suggested with the offer for purchaser's consideration.

7.0 CABLE TERMINATIONS AND JOINTING

7.1 All cable entries in the equipment shall be sealed by cable glands.

7.2 Power cable terminations shall be carried out in a manner such as to avoid strain on the terminals by providing suitable clamps near the terminals.

7.3 Control cable cores entering switchboard or control panels shall be neatly bunched and strapped with PVC perforated tapes/nylon ties and suitably supported to keep them in position at the terminal block. Spare cores shall be neatly dressed and suitably taped at both ends.

7.4 Cable joint, not more than one in a circuit, shall normally be made at an intermediate point in the straight run of the cable only when the length of the run is more than the standard drum length supplied by the cable manufacturer.

7.5 Junction boxes shall be used, wherever required, for jointing of control cables.

7.6 Termination and jointing shall generally conform to the requirements of IS: 1255 and shall strictly conform to the recommendations of termination and jointing kit supplier.

7.3 Cable installation shall be properly coordinated at site with other services and wherever necessary suitable adjustment shall be made in the cable routings with a view to avoid interference with any part of the building, structures, equipment, utilities and services

7.8 All apparatus, connections and cable work shall be designed and arranged to minimise the risk of fire and ingress of water. All material required to achieve the same shall be included in the cost of installation of cables.

10.0 DRAWINGS / DUCUMENTS TO BE SUBMITTED AFTER AWARD OF CONTRACT

10.2 The following documents shall be furnished after award of contract for purchaser's approval.

a) Data Sheet-C
b) Final Field Quality Plan
c) Final Quality Plan

CLAUSE NO.

QUALITY ASSURANCE

INDUCTION MOTOR & SYNCHRONOUS MACHINE

TESTS/CHECKS / TEMS/COMPONENTS	Visual	Dimensional	Make/Type/Rating/TC/General Physical Inspection	Mech/Chem. Properties	NDT /DP/MPI/UT	Metallography	Electrical Characteristics	Welding/Brazing(WPS/PQR)	Heat Treatment
Plates for stator frame, end shield, spider etc.	Y	Y	Y	Y					Y
Shaft	Y	Y	Y	Y	Y	Y			Y
Magnetic Material	Y	Y	Y	Y	Y		Y		
Rotor Copper/Aluminium	Y	Y	Y	Y		Y	Y		Y
Stator copper	Y	Y	Y	Y			Y		Y
SC Ring	Y	Y	Y	Y	Y	Y	Y	Y	Y
Insulating Material	Y		Y	Y			Y		
Tubes for Cooler	Y	Y	Y	Y	Y				Y
Sleeve Bearing	Y	Y	Y	Y	Y				Y
Stator/Rotor, Exciter Coils	Y	Y	Y				Y	Y	
Castings, stator frame, terminal box and bearing housing etc.	Y	Y	Y	Y	Y			Y	
Fabrication & machining of stator, rotor, terminal box	Y	Y			Y				Y
Wound stator	Y	Y					Y	Y	
Wound Exciter	Y	Y					Y	Y	
Rotor complete	Y	Y					Y		
Exciter, Stator, Rotor, Terminal Box assembly	Y	Y					Y		
Accessories, RTD, BTD,CT, Brushes, Diodes, Space heater, antifriction bearing, cable glands, lugs, gaskets etc.	Y	Y	Y						
Motor (IS 325 / 4722/ 9283)	Y	Y	Y						

CLAUSE NO.	QUALITY ASSURANCE

INDUCTION MOTOR & SYNCHRONOUS MACHINE

TESTS/CHECKS / ITEMS/COMPONENTS	Magnetic Characteristics	Hydraulic/Leak/Pressure Test	Thermal Characteristics	Run out	Dynamic Balancing	All routine & acceptance tests as per IS-325/IS-4722 /IS- 9283/IS 2148/IEC 60079-I	Vibration	Over speed	Tan delta, shaft voltage & polarization index test
Plates for stator frame, end shield, spider etc.									
Shaft									
Magnetic Material	Y		Y						
Rotor Copper/Aluminium									
Stator copper			Y						
SC Ring									
Insulating Material			Y						
Tubes for Cooler		Y							
Sleeve Bearing		Y							
Stator/Rotor, Exciter Coils									
Castings, stator frame, terminal box and bearing housing etc.									
Fabrication & machining of stator, rotor, terminal box									
Wound stator									
Wound Exciter									
Rotor complete				Y	Y				
Exciter, Stator, Rotor, Terminal Box assembly									
Accessories, RTD, BTD,CT, Brushes, Diodes, Space heater, antifriction bearing, cable glands, lugs, gaskets etc.									
Motor (IS 325 / 4722 / 9283/2148/IEC 60079-I)						Y	Y	Y	Y1

Note : 1. This is an indicative list of tests/checks. The manufacture is to furnish a detailed Quality Plan indicating the practices & Procedure followed along with relevant supporting documents during QP finalisation. However, No QP for LT motor upto 50KW.
2. Makes of all major bought out items will be subject to NTPC approval.
Y1 = for HT Motor / Machines only.

		QUALITY PLAN	CUSTOMER :			PROJECT TITLE			SPECIFICATION NUMBER :			PART OF SPECIFICATION NO PE-TS-387-501-A001
			BIDDER/ VENDOR :			QUALITY PLAN NUMBER PED-507-00-Q-002/03			SPECIFICATION TITLE: STANDARD TECH. SPEC FOR 1.1 kV PVC CONTROL CABLES			
		SHEET 1 OF 5	SYSTEM			ITEM :PVC POWER & CONTROL CABLE			SECTION			VOLUME III
SL. NO.	COMPONENT/OPERATION	CHARACTERISTICS CHECK	CAT.	TYPE/ METHOD OF CHECK	EXTENT OF CHECK	REFERENCE DOCUMENT	ACCEPTANCE NORM	FORMAT OF RECORD	AGENCY P	W	V	REMARKS
1	2	3	4	5	6	7	8	9	10			11
1.0	RAW MATERIAL											Raw material verification as per approved sub-vendor list
1.1	PVC Compound(for insulation and sheath)	1. Physical properties	MA	Physical Tests	Sample	IS-5831/BHEL Specification	IS-5831/BHEL Specification	Log Book/ Test Cert.	3/2	-	2	
		2. FRLS Properties (outer sheath)	MA	Envir/ Chem	Sample	-do-	-do-	-do-	3/2	-	2	
1.2	Galvanised steel wire/strip	1. Phy.and Elec. Properties	MA	Physical & Electrical Tests	Sample*	IS-3975 BHEL Specification	IS-3975/BHEL Specification	-do-	3/2	-	2	* Sample from each Batch/Lot.
		2. Dimension	MA	Measurement	-do-	-do-	-do-	-do-	3/2	-	2	
		3.Galvanization Quality	MA	Galv.Tests	-do-	-do-	-do-	-do-	3/2	-	2	
1.3	Copper/Aluminium Rods/ Wires	1. Physical Properties	MA	Physical Tests	-do-	IS-613 IS-5484 IS-8130 AND BHEL Specification	IS-613 IS-5484 IS-8130 AND BHEL Specification	-do-	3/2	-	2	
		2. Chemical Composition & purity	MA	Chemical analysis	-do-	-do-	-do-	-do-	3/2	-	2	
		3.Electrical properties	MA	Electrical Tests	-do-	-do-	-do-	-do-	3/2	-	2	
		4.Dimension	MA	Measurement	-do-	-do-	-do-	-do-	3/2	-	2	

BHEL	PARTICULARS	BIDDER/VENDOR
	NAME	
	SIGNATURE	
	DATE	

BIDDER'S/VENDORS COMPANY SEAL

		QUALITY PLAN	CUSTOMER :			PROJECT TITLE			SPECIFICATION : NUMBER :	PART OF SPECIFICATION NO PE-TS-387-501-A001		
			BIDDER/ VENDOR :			QUALITY PLAN NUMBER PED-507-00-Q-002/03			SPECIFICATION TITLE: STANDARD TECH. SPEC FOR 1.1 kV PVC CONTROL CABLES			
		SHEET 2 OF 5	SYSTEM			ITEM :PVC POWER & CONTROL CABLE			SECTION			VOLUME III
SL. NO.	COMPONENT/OPERATION	CHARACTERISTICS CHECK	CAT.	TYPE/ METHOD OF CHECK	EXTENT OF CHECK	REFERENCE DOCUMENT	ACCEPTANCE NORM	FORMAT OF RECORD	AGENCY P	W	V	REMARKS
1	2	3	4	5	6	7	8	9	10			11
2.0	IN PROCESS											
2.1	Wire Drawing , Tinning and Annealing	1. Physical, Electr. Finish & dimension	CR	Phy.&Elect. Tests Visual & Meas.	Sample	BHEL Specn. IS-8130	BHEL Specn. IS-8130	Log Book	2	-	1	
		2. Chemical test for Tinning	CR	Chemical Test	Sample	-do-	-do-	-do-	2	-	-	
2.2	Stranding of wires	1. No.of wires	MA	Counting	Sample	Vendors/BHEL Specn. & Apprd. Data Sheet & Relevant IS	Vendors/BHEL Specn. & Apprd. Data Sheet & Relevant IS	-do-	2	-	-	
		2. Sequence, lay length & Direction	MA	Visual, Meas	Sample	-do-	-do-	-do-	2	-	-	
		3 Surface Finish	MA	Visual	Sample	-do-	-do-	-do-	2	-	-	
		4.Dimension	MA	Measurement	Sample	-do-	-do-	-do-	2	-	-	
2.3	Core Insulation (No repair permitted)	1. Surface finish	MA	Visual	100%	-	Free from bulging burnt particles lumps, cuts & Scratches.	-do-	2	-	1	
		2 Insulation thickness	CR	Measurement	Sample	Appd.data sheet IS-1554	Appd.data sheet IS-1554	-do-	2	-	-	

	PARTICULARS	BIDDER/VENDOR
BHEL	NAME	
	SIGNATURE	
	DATE	BIDDER'S/VENDORS COMPANY SEAL

			CUSTOMER :			PROJECT TITLE			SPECIFICATION : NUMBER :			PART OF SPECIFICATION NO PE-TS-387-501-A001
		QUALITY PLAN	BIDDER/ VENDOR :			QUALITY PLAN NUMBER PED-507-00-Q-002/03			SPECIFICATION TITLE: STANDARD TECH. SPEC FOR 1.1 kV PVC CONTROL CABLES			
		SHEET 3 OF 5	SYSTEM			ITEM :PVC POWER & CONTROL CABLE			SECTION			VOLUME III
SL. NO.	COMPONENT/OPERATION	CHARACTERISTICS CHECK	CAT.	TYPE/ METHOD OF CHECK	EXTENT OF CHECK	REFERENCE DOCUMENT	ACCEPTANCE NORM	FORMAT OF RECORD	AGENCY P	W	V	REMARKS
1	2	3	4	5	6	7	8	9	10			11
		3. Concentricity #	CR	Measurement	Sample	Mfr's Std./Appd. data sheet	Mfr's Std./Appd. data sheet	Log Book	2	-	1	# To be checked at starting & finish end of Extruded Length
		4 Dia over insulation	MA	Measurement	Sample	-do-	-do-	-do-	2	-	-	
		5. Spark Test or Water Immersion test	CR	Electrical	100%	Mfr's Std.	Mfr's Std.	-do-	2	-	1	
		6. Core identification	MA	Visual	100%	IS-1554	IS-1554	-do-	2	-	-	
2.4	Core Laying	1. Dia over laidup core	MA	Measurement	Sample	-do-	-do-	Log Book	2	-	-	
		2.Sequence of lay, Lay length & direction up core	MA	Visual & Meas.	Sample	Mfrs.Std./relevant IS	Mfrs.Std./relevant IS	-do-	2	-	-	
2.5	InnerSheath Extrusion	1. Surface finish	MA	Visual	100%	--	Free from bulging, burnt particles, lumps cuts & scratches.	-do-	2	-	-	
		2. Sheath thickness	MA	Measurement	Sample	IS-5831, IS-1554 data sheet	IS-5831, IS-1554 data sheet	-do-	2	-	-	
		3.Dia over inner sheath	MA	-do-	-do-	-do-	-do-	-do-	2	-	-	
2.6	Armouring	1. No.of wires/Strips	MA	Counting	At the start of the process	BHEL Specn./ Appd. Data sheet IS-3975 & IS-1554	BHEL Specn./ Appd. Data sheet IS-3975 & IS-1554	-do-	2	-	-	
		2. Lay Direction	MA	Visual	-do-	-do-	-do-	-do-	2	-	-	

	PARTICULARS	BIDDER/VENDOR
BHEL	NAME	
	SIGNATURE	
	DATE	BIDDER'S/VENDORS COMPANY SEAL

		QUALITY PLAN	CUSTOMER :			PROJECT TITLE			SPECIFICATION NUMBER :	PART OF SPECIFICATION NO PE-TS-387-501-A001		
			BIDDER/ VENDOR :			QUALITY PLAN NUMBER PED-507-00-Q-002/03			SPECIFICATION TITLE: STANDARD TECH. SPEC FOR 1.1 kV PVC CONTROL CABLES			
		SHEET 4 OF 5	SYSTEM			ITEM :PVC POWER & CONTROL CABLE			SECTION			VOLUME III
SL. NO.	COMPONENT/OPERATION	CHARACTERISTICS CHECK	CAT.	TYPE/ METHOD OF CHECK	EXTENT OF CHECK	REFERENCE DOCUMENT	ACCEPTANCE NORM	FORMAT OF RECORD	AGENCY P	W	V	REMARKS
1	2	3	4	5	6	7	8	9	10			11
		3. Lay Length	MA	Visual, Meas.	At the start of the process	BHEL Specn./ Appd. Data sheet IS-3975 & IS-1554	BHEL Specn./ Appd. Data sheet IS-3975 & IS-1554	Log Book	2	-	-	
		4. Coverage	MA	Measurement	-do-	-do-	-do-	-do-	2	-	-	
		5. Dia over armouring	MA	Measurement	-do-	-do-	-do-	-do-	2	-	-	
2.7	Outer Sheath Extrusion	1. Surface Finish	MA	Visual	100%	-	Free from Bulging Burnt particles, lumps, cuts & scratches	Log Book	2	-	-	
		2.Sheath thickness	MA	Measurement	Sample	IS-5831 & IS-1554 Data Sheet	IS-5831 & IS-1554 Data Sheet	Log Book	2	-	-	
		3. Dia over outer sheath	MA	Measurement	Sample	-do-	-do-	-do-	2	-	-	
		4. Marking	MA	Visual	100%	IS-1554 & BHEL Specn.	IS-1554 & BHEL Specn.	Test Report	2	-	-	Sequential marking shall be done by printing
2.8	Finished Cable	1. Routine Test	CR	Elec. & Meas.	100%	IS-1554 & BHEL Specn	IS-1554 & BHEL Specn	Test Report	2	-	1	
		2. Type & FRLS Tests	CR	Elec., Phy & Meas.	Sample *	-do-/Apprd.data sheet	-do-/Apprd.data sheet	Test Report	2	-	1	* One Drum/Size/Lot
3.0	Final Inspection	1. Finish & Length	MA	Visual	(See remark)	BHEL specn. IS-1554	Free from Bulging Burnt particles, lumps, cuts & scratches	Test Report	2	1	-	One drum each for Power & control cables in a Lot
			PARTICULARS		BIDDER/VENDOR							
	BHEL		NAME									
			SIGNATURE									
			DATE						BIDDER'S/VENDORS COMPANY SEAL			

BHEL	QUALITY PLAN		CUSTOMER :			PROJECT TITLE			SPECIFICATION NUMBER :			PART OF SPECIFICATION NO PE-TS-387-501-A001
			BIDDER/ VENDOR :			QUALITY PLAN NUMBER PED-507-00-Q-002/04			SPECIFICATION TITLE: STANDARD TECH. SPEC FOR 1.1 kV PVC CONTROL CABLES			
	SHEET 5 OF 5		SYSTEM			ITEM :PVC POWER & CONTROL CABLE			SECTION			VOLUME III
SL. NO.	COMPONENT/OPERATION	CHARACTERISTICS CHECK	CAT.	TYPE/ METHOD OF CHECK	EXTENT OF CHECK	REFERENCE DOCUMENT	ACCEPTANCE NORM	FORMAT OF RECORD	AGENCY P	W	V	REMARKS
1	2	3	4	5	6	7	8	9	10			11
		2. Dimension	MA	Measurement	As per IS	Appd.Data Sheet/ IS-1554 & IS-10810	Appd.Data Sheet/ IS-1554 & IS-10810	Test Report	2	1	-	
		3. Armouring - Coverage No.of Wires/Strips	MA	Visual & Meas.	As per IS	-do-	-do-	-do-	2	1	-	
		4. Marking/Colour Coding	MA	Visual	-do-	-do-	-do-	-do-	2	1	-	
		5. Acceptance Tests	CR	Phy & Elect. Tests	-do-	-do-	-do-	-do-	2	1		
		6. Type & FRLS Tests	CR	Measurement	(SEE REMARK)	BHEL Specn. Apprd.Data Sheet	BHEL Specn. Apprd.Data Sheet	-do-	2	1	-	Type Test shall be witnessed on one sample per type(Power/control) of every lot

NOTES:-

(A) JOINTS IN WIRE SHALL BE AS PERMITTED BY IS / BHEL SPECIFICATION. VENDOR TO CERTIFY THE SAME.
(B) NO REPAIR OF CORE INSULATION PERMITTED
(C) CABLE ENDS SHALL BE SEALED AS PER BHEL SPECIFICATION
(D) PURCHASER SHALL HAVE RIGHT TO WITNESS THE SPARK TEST AT CORE STAGE
(E) RECORD OF RAW MATERIAL, PROCESS & ALL STAGES SHALL BE CERTIFIED BY VENDORS QC. AND ARE LIABLE TO AUDIT CHECK BY PURCHASER.
(F) FILLERS/DUMMY CORES ETC. SHALL BE AS PER BHEL SPECIFICATION
(G) WHEREVER EXTENT OF CHECK FOR STAGE IS MENTIONED AS SAMPLES, THE SAME SHALL BE AS PER VENDORS SAMPLING PLAN
(H) VENDOR SHALL FURNISH COMPLIANCE CERTIFICATE TO THE INSPECTION AGENCY CONFIRMING THE PACKING AS PER BHEL SPECIFICATION.

LEGEND : P : PERFORMER W: WITNESSER V: VERIFIER (1) BHEL/BHEL's CUSTOMER: 2-VENDOR : 3 SUB VENDOR

	PARTICULARS	BIDDER/VENDOR
BHEL	NAME	
	SIGNATURE	
	DATE	BIDDER'S/VENDORS COMPANY SEAL

BHEL	QUALITY PLAN		CUSTOMER :			PROJECT TITLE			SPECIFICATION : NUMBER :			
			BIDDER/ VENDOR :			QUALITY PLAN NUMBER PED-507-00-Q-005/02			SPECIFICATION : TITLE			
	SHEET 1 OF 2		SYSTEM			ITEM : CABLE TRAYS & ACCESSORIES			SECTION			VOLUME III
SL. NO.	COMPONENT/OPERATION	CHARACTERISTIC CHECK	CAT.	TYPE/ METHOD OF CHECK	EXTENT OF CHECK	REFERENCE DOCUMENT	ACCEPTANCE NORM	FORMAT OF RECORD	AGENCY P	W	V	REMARKS
1	2	3	4	5	6	7	8	9	10			11
1.0	RAW MATERIAL											
1.1	ROLLED SHEET	1.SURFACE FINISH	MA	VISUAL	100%	IS-1079/ TECH. SPEC.	IS-1079/ TECH. SPEC.	QC RECORD	2	-	-	
		2.DIMENSIONS	MA	MEASUREMENT	100%	-DO-/IS-1730	-DO-/IS-1730	-DO-	2	-	-	
		3.CHEM.& PHY. PROPERTY	MA	VERIFICATION OF TC	100%	IS1079/TECH SPEC	IS1079/TECH SPEC	MILL TC	3/2	-	-	
1.2	ZINC	CHEM.COMP.		CHEM TEST	EACH HEAT	IS-209	IS-209	TC	3/2	-	1/2	
2.0	IN-PROCESS											
2.1	FABRICATION	1.DIMENSIONS & DISTORTION	MA	MEASUREMENT	100%	APPD.DRG.	APPD.DRG.	QC RECORD	2	-	-	
		2.SURFACE FINISH	MA	VISUAL	100%		FREE FROM BURRS	-DO-	2	-	-	
		3.WELDING QUALITY	MA	VISUAL	100%	PLANT STANDARD	FREE FROM DEFECTS & SLAG	-DO-	2	-	-	
		4.RIGIDITY (CABLE TRAYs)	MA	DEFLECTION TEST	2 OF EACH SIZE	TECH. SPEC.	TECH. SPEC.	-DO-	2	-	-	
2.2	SURFACE PREPARATION	1.CLEANING PICKLING & RINSING, BATH STRENGTH/ PURITY & TEMPERATURE	MA	CHEM. & MEASUREMENT	PERIODIC IN EACH SHIFT	IS:2629	IS:2629	QC RECORD	2	-	-	
		2. SURFACE QUALITY	MA	VISUAL	100%	-DO-	-DO-	-DO-	2	-	-	

1. BHEL, 2. CONTACTOR, 3. SUPPLIER	PARTICULARS	BIDDER/VENDOR	
INDICATE 'P' PERFORM 'W' WITNESS & 'V' VERIFICATION	NAME		
	SIGNATURE		
	DATE		BIDDER'S/VENDORS COMPANY SEAL

BHEL			CUSTOMER :			PROJECT TITLE			SPECIFICATION : NUMBER :			PART OF SPECIFICATION NO PE-TS-387-501-A001
		QUALITY PLAN	BIDDER/ VENDOR :			QUALITY PLAN NUMBER PED-507-00-Q-005/02			SPECIFICATION : TITLE			
		SHEET 2 OF 2	SYSTEM			ITEM : CABLE TRAYS & ACCESSORIES			SECTION			VOLUME III
SL. NO.	COMPONENT/OPERATION	CHARACTERISTIC CHECK	CAT.	TYPE/ METHOD OF CHECK	EXTENT OF CHECK	REFERENCE DOCUMENT	ACCEPTANCE NORM	FORMAT OF RECORD	AGENCY P	W	V	REMARKS
1	2	3	4	5	6	7	8	9	10			11
2.3	GALVANISING	1.TEMPERATURE OF ZINC BATH	MA	TEMPERATURE INDICATOR	CONTINUOUS	IS-2629	IS-2629	-DO-	2	-	-	
		2.DURATION OF DIP	MA	VISUAL	-DO-	MANUFS.PRACT	MANUFS.PRACT		2	-	-	
		3.SURFACE QUALITY	MA	VISUAL	100%	-DO-	FREE FROM BURRS ROUGHNESS, SLAG FLUX. STAIN. ETC.	-DO-	2	-	-	
		4.GROSS QUANTITY & AGITATION	MA	TEST	PERIODIC	RELEVENT:IS	RELEVANT:IS	-DO-	2	-	-	
3.0	FINISHED ITEMS											
3.1	(CABLE TRAY, ACCESSO-RIES & HARDWARES)	1.DIMENSIONS DISTORTION	MA	MEASUREMENT	IS-2500 (1) LEVEL IV	APPD. DRG	APPD. DRG	INSP.REPORT	2	1	-	BOLT AND NUTS SHALL BE OF REPUTED & APPROVED MAKE
		2,SURFACE FINISH	MA	VISUAL	-DO-		FREE FROM BURRS, SLAG, ROUGHNESS, FLUX. STAIN. ETC.	-DO-	2	1	-	
		3.RIGIDITY (FOR TRAYS)	MA	DEFLECTION TEST	1 OF EACH TYPE OF 600MM OR 450MM	TECH. SPEC.	TECH. SPEC.	-DO-	2	1	-	
		4.WEIGHT OF ZINC COATING	MA	CHEM. TEST	IS-4759	IS-6745	TECH. SPEC.	-DO-	2	1	-	
		5.UNIFORMITY OF ZINC COATING	MA	-DO-	-DO-	IS-2633	IS-2633	-DO-	2	1	-	
		6.THICKNESS OF ZINC COATING	MA	ELCOMETER	-DO-	TECH. SPEC.	TECH. SPEC.	-DO-	2	1	-	
		7.ADHESION	MA	MECH.TEST	IS-4759	IS-2629	IS-2629	-DO-	2	1	-	

1. BHEL, 2. CONTACTOR, 3. SUPPLIER	PARTICULARS	BIDDER/VENDOR
INDICATE 'P' PERFORM 'W' WITNESS & 'V' VERIFICATION	NAME	
	SIGNATURE	
	DATE	BIDDER'S/VENDORS COMPANY SEAL

LOAD TITLE	RATING (KW / A)		UNIT (U)/STN (S)	Nos.		VOLTAGE CODE*	FEEDER CODE**	EMER. LOAD (Y)	CONT.(C)/ INTT.(I)	STARTING TIME >5 SEC (Y)	LOCATION	BOARD NO.	CABLE		BLOCK CABLE DRG. No.	CONTROL CODE	REMARKS	LOAD No.
	NAME PLATE	MAX. CONT. DEMAND (MCR)		RUNNING	STANDBY								SIZE CODE	NOs				
1	2	3	4	5	6	7	8	9	10	11	12	13	14	15	16	17	18	19

NOTES:

1. COLUMN 1 TO 12 & 18 SHALL BE FILLED BY THE REQUISITIONER (ORIGINATING AGENCY); REMAINING COLUMNS ARE TO BE FILLED UP BY PEM (ELECTRICAL)
2. ABBREVIATIONS : * VOLTAGE CODE (7):- (ac) A=11 KV, B=6.6 KV, C=3.3 KV, D=415 V, E=240 V (1 PH), F=110 V (cc): G=220 V, H=110 V, J=48 V, K=+24V, L=-24 V
   : ** FEEDER CODE (8):- U=UNIDIRECTIONAL STARTER, B=BI-DIRECTIONAL STARTER, S=SUPPLY FEEDER, D=SUPPLY FEEDER (CONTACTER CONTROLLED)

बीएचईएल BHEL	LOAD DATA (ELECTRICAL)	JOB NO.		ORIGINATING AGENCY		PEM (ELECTRICAL)
		PROJECT TITLE		NAME		DATA FILLED UP ON
		SYSTEM / S		SIGN.		DATA ENTERED ON
		DEPTT. / SECTION		SHEET 1 OF 1	REV. 00	DE'S SIGN. & DATE

1.0	Design ambient temperature	:	50 ^{o}C
2.0	Maximum acceptable kW rating of LV motor	:	200KW
3.0	Installation (Indoors/ Outdoors)	:	As required
4.0	Details of supply system		
	a) Rated voltage (with variation)	:	415V ± 10%
	b) Rated frequency (with variation)	:	50 Hz +3 to -5%
	c) Combined voltage & freq. variation	:	10% (sum of absolute values)
	d) System fault level at rated voltage	:	45 kA RMS for 1 sec
	e) Short time rating for terminal boxes		
	○ 110 kW and above (Breaker controlled)	:	45 KA for 0.20 sec.
	○ Below 110 kW (Contactor controlled)	:	45 KA protected by fuse
	f) LV System grounding	:	Solidly
5.0	Class of insulation	:	Class 'F', with temp rise limited to 70^{0}C.
6.0	Minimum voltage for starting (As percentage of rated voltage)	:	85% of rated voltage
7.0	Power cables data	:	Shall be given during Detailed engg
8.0	Earth Conductor Size & Material	:	Shall be given during Detailed engg
9.0	Space heater supply	:	240 V, 1¢ , 50 Hz
10.0	Rating up to which Single phase motor	:	Acceptable below 0.20 kW

11.0 The ratio of locked rotor KVA at rated voltage to rated KW shall not exceed the following (Without any further tolerance): As per clause no. 7.16 of technical spec sec-VI part-B (page 6 of c10)

12.0	Additional tests	:	As per QP
12.1	Flame-proof motor		
	a) Enclosure suitable (As per IS:2148)	:	As per requirement
	b) Classification of Hazardous area (As per IS: 5572 part-I)	:	As per requirement
12.0	Makes	:	As per customer approved vendors

DATA SHEET-A

DS-AI. SPECIFIC TECHNICAL REQUIREMENTS

1.0	Type of Cable	Flame Retardant Low Smoke (FRLS)
2.0	Standard applicable in general	IS: 1554 PART (I)
3.0	Voltage Grade	1.1kV
4.0	Number of cores, cross sectional area of conductors and quantities	As per BOQ, Annexure-A to Section-C
5.0	**CONDUCTOR**	
(a)	Material	Copper
	Grade and Class	Stranded, Un-tinned (plain) annealed high conductivity, Class 2
(b)	Standard Applicable	IS: 8130
(c)	Shape	Circular / shaped as per IS
(d)	Min. number of strands	7
6.0	**INSULATION**	
(a)	Material	PVC type-A
(b)	Standard Applicable	IS: 5831
(c)	Continuous withstand temperature	70°C
(d)	Short-circuit withstand temperature	160°C
(e)	Method of application	By extrusion; sleeve extrusion not permitted.
7.0	**CORE IDENTIFICATION**	Colour coding as per IS.
(a)	Control cables up to 5 core	Colour coded as per IS: 1554 (Part-I)
(b)	Control cables above 5 cores	By numbering as per IS: 1554 (Part-I) Insulation to have black colour.
8.0	**INNER SHEATH (for all armoured cables & multi-core unarmoured cables)**	
(a)	Material	PVC Type ST1 as per IS: 5831
(b)	Colour	Black
(c)	Whether FRLS	No
(d)	Fillers	Acceptable
(e)	Material of fillers (if permitted)	Same as inner sheath
(f)	Method of application	
(1)	Multi-core cables:	
(i)	With fillers	Pressure/Vacuum extruded
(ii)	Without fillers	Pressure extruded

9.0	**ARMOUR (where applicable)**	
(a)	Material:	
(i)	Multi-core cables	Galvanised Steel *Round Wire / Formed wire* armour conforming to (i) Type *'a'/ 'b'* as per Table- 5 of IS 1554-I and (ii) IS 3975 as per project requirements.
(b)	Minimum Coverage	90%
(c)	Gap between armour wires	Shall not exceed one armour wire space (No cross-over/ over-riding)
(d)	Breaking load of joint	95 % of normal armour
10.0	**OUTERSHEATH**	
(a)	Material	PVC Type *ST1* as per IS: 5831
(b)	Colour	*Black*
(c)	Whether FRLS	Yes
(d)	Method of application	Extruded
(e)	Marking (by printing)	*Cable size (cross section area and no. of cores) and voltage grade @ 5m* *Letters FRLS @ 5m* *Manufacturer's name and/ or trade name, and year of manufacture @ 5m* *Progressive sequential marking @ 1m..*
11.0	**FRLS CHARACTERISTICS**	
(a)	Oxygen index	Min 29 (As per ASTMD 2863)
(b)	Temperature index	Min. 250°C
(c)	Acid gas generation	*Max. 20% (as per IEC-754-1)*
(d)	Smoke density rating	*60% (As per ASTM D2843)*
(e)	Flammability Test	As per IEC: 60332 Part-3 *Cat-B/* IS-1554-I/ IEEE-383 & Swedish chimney (where applicable)
12.0	**TOLERANCE ON OUTER DIAMETER**	Up to 30mm; ± 1.5mm Above 30mm; ± 5% or ± 3mm, whichever is less.
13.0	**MINIMUM BENDING RADIUS**	12 x O.D.
14.0	**SAFE PULLING FORCE**	50 N/ sq. mm.
15.0	**CABLE DRUMS**	
(a)	Type & construction	As per IS 10418
(b)	Standard drum length	*1000m (±) 5%. (as specified in BOQ)*

DATA SHEET-A

DS-AI. SPECIFIC TECHNICAL REQUIREMENTS

1.0	Type of Cable	Flame Retardant Low Smoke (FRLS)	
2.0	Standard applicable in general	IS: 1554 PART (I)	
3.0	Voltage Grade	1.1kV	
4.0	Number of cores, cross sectional area of conductors and quantities	As per BOQ, Annexure-A to Section-C	
5.0	Formula for calculating short circuit current for different durations	Ish= k A/ √ (t) where, Ish = Short circuit current in kA t = Fault clearing time in sec. K = a constant =0.069 for Aluminium conductor HRPVC insulation = 0.104 for copper conductor HRPVC insulation = 0.076 for Aluminium conductor PVC insulation = 0.115 for copper conductor PVC insulation	
6.0	Installation Conditions for specified current rating		
(a)	ambient air temperature	40 deg. C	
(b)	ground temperature	30 deg. C	
(c)	depth of laying of cables buried in ground	75 cm	
(d)	Thermal resistivity of soil	150 deg. C cm/W	
7.0	**CONDUCTOR**		
(a)	Material	Aluminium	Copper
	Grade and Class	Stranded, H2, Class 2	Stranded, Un-tinned (plain) annealed high conductivity, Class 2
(b)	Standard Applicable	IS: 8130	
(c)	Shape	Circular / shaped as per IS	
(d)	Min. number of strands	As per Table-2 of IS: 8130	
8.0	**INSULATION**		
(a)	Material	PVC type-A/C	
(b)	Standard Applicable	IS: 1554 Part-I	
(c)	Continuous withstand temperature	70°C/ 85 °C	
(d)	Short-circuit withstand temperature	160°C	
(e)	Method of application	By extrusion; sleeve extrusion not permitted.	
9.0	**CORE IDENTIFICATION**	Colour coding as per IS.	

10.0	**INNER SHEATH (applicable for multi core cables only)**	
(a)	Material	PVC Type *ST1/ ST2* as per IS: 5831
(b)	Colour	*Black*
(c)	Whether FRLS	*No*
(d)	Fillers	Acceptable
(e)	Material of fillers (if permitted)	Same as inner sheath (Material of filler to be compatible with that of inner sheath)
(f)	Method of application	
(1)	Multi-core cables:	
(i)	With fillers	*Pressure/Vacuum extruded*
(ii)	Without fillers	*Pressure extruded*
11.0	**ARMOUR (where applicable)**	
(a)	Material:	
(i)	Single core cables	Aluminium Round Wire H4 grade to IS: 8130
(ii)	Multi-core cables	Galvanised Steel *Round Wire / Formed wire* armour conforming to (i) Type 'a'/ 'b' as per Table- 5 of IS 1554-I and (ii) IS 3975 as per project requirements.
(b)	Minimum Coverage	90%
(c)	Gap between armour wires	Shall not exceed one armour wire space (No cross-over/ over-riding)
(d)	Breaking load of joint	95 % of normal armour
12.0	**OUTERSHEATH**	
(a)	Material	PVC Type *ST1/ ST2* as per IS: 5831
(b)	Colour	*Black*
(c)	Whether FRLS	Yes
(d)	Method of application	Extruded
(e)	Marking	*Cable size (cross section area and no. of cores) and voltage grade @ 5m (by embossing)* *Letters FRLS @ 5m (by embossing)* *Manufacturer's name and/ or trade name, and year of manufacture @ 5m (by embossing)* *Progressive sequential marking @ 1m. (by embossing/ printing).*
13.0	**FRLS CHARACTERISTICS**	
(a)	Oxygen index	Min 29 (As per ASTMD 2863)
(b)	Temperature index	Min. 250°C
(c)	Acid gas generation	*Max. 20% (as per IEC-754-1)*
(d)	Smoke density rating	*60% (As per ASTM D2843)*
(e)	Flammability Test	As per IEC: 60332 Part-3-23 *Cat-B/* IS-1554-I/ Swedish chimney (where applicable)
14.0	**TOLERANCE ON OUTER DIAMETER**	Up to 30mm; ± 1.5mm Above 30mm; ± 5% or ± 2mm, whichever is less.
15.0	**MINIMUM BENDING RADIUS**	
(a)	Single core cables	15 x O.D.

(b)	Multi core cables	12 x O.D.
16.0	**SAFE PULLING FORCE**	
(a)	Aluminium conductor cable	30 N/ sq. mm.
(b)	Copper conductor cable	50 N/ sq. mm.
17.0	**CABLE DRUMS**	
(a)	Type & construction	As per IS 10418
(b)	Standard drum length	*500m (±) 5% / 1000m (±) 5%. (as specified in BOQ)*

DATASHEET A

(SPECIFIC TECHNICAL REQUIREMENTS)

(DE TO STRIKE OUT OPTION NOT APPLICABLE FOR THE PROJECT)

1.0 **APPLICABLE STANDARDS**:

a) IS: 2062 For Structural steel.
b) IS: 1079 For hot rolled carbon steel sheet and strip.
c) IS: 1730 For dimensions for steel sheet and strip.
d) IS: 1363 Hexagon head bolts, screws and nuts.
e) IS: 5 For colours of paint.
f) IS: 6005 For surface pre-treatment.
g) IS: 2629 For hot dip galvanising of steel.
h) IS: 2633 For testing of zinc coating.
i) IS: 6745 For determining of mass of zinc coating.
j) IS: 513 For Cold Rolled Low carbon steels and strips.
k) IS: 1367 Galvanised Coating on threaded Fasteners. (Part-XIII)
l) IS: 1852 For Rolling and Cutting Tolerances of hot rolled steel products.

2.0 **CABLE TRAYS & ACCESSORIES**:

a)	Material:	Rolled Mild Steel.
b)	Type:	Ladder type Perforated type
c)	Standard Length of straight runs of cable trays	2.5 metres (Piece length).
d)	Standard width (mm):	600 450 300 150 100
e)	Construction:	Conforming to enclosed drawings [PE-DG-------507-E-----]
f)	Bending radius of accessories	600 300 (Inner side of bends)
g)	Tolerance in length/width/height	+/- 2 mm.

3.0 **FITTINGS**:

End connections: Through Coupler plates
(Side Coupler Plates shall be provided as part of cable tray & accessories supply) with bolts, nuts, washers etc for the two sides of each of the 2.5 m long cable trays, elbow, cross, tee etc.)

4.0	TRAY COVERS:	**[APPLICABLE / NOT APPLICABLE FOR PROJECT].**
	a) Type:	Non-Perforated type, Perforated type
	b) Material:	Rolled mild steel
	c) Width:	Same as cable trays
	d) Tolerance in length/ width/ height	Same as cable trays
5.0	SHEET THICKNESS:	
	a) For trays accessories & covers:	2.0 mm
	b) For coupler plate:	3.0 mm
	c) Tolerance in thickness:	(+/-0.2mm)
6.0	SURFACE TREATMENT:	
	a) Painting:	**[APPLICABLE / NOT APPLICABLE FOR PROJECT].**
	i) Pre-treatment:	IS: 6005
	ii) Surface cleaning	Surface shall be cleaned with sand paper and/or cotton cloth to remove accumulated dust and dirt.
	iii) Surface finish:	Complete surface shall be provided with one coat of red oxide paint followed by two coats of abrasion resistant, anti- corrosive synthetic enamel. Second coat shall be applied only when the first coat has completely dried-up. Surface finish after the painting shall be smooth, uniform and free from spots.
	iv) Tests for painting:	As per IS: 1477 (Part 1 & Part 2) in general.
	b) Galvanizing:	**[APPLICABLE / NOT APPLICABLE FOR PROJECT].**
	i) Pre-treatment:	IS 6005 before galvanisation.
	ii) Type	Hot dip galvanization
	iii) Applicable Standard:	IS 2629
	iv) Minimum thickness:	75 microns (minimum)
	v) Min. weight of: Zinc deposit	610 gms per square meter
	vi) Tests for galvanizing:	Weight, thickness and uniformity of zinc coating as per IS: 6745 and IS: 2633.

Clause No.	MOTORS
	..... (Bidder's Name)
DE-1B	**LT MOTORS**
	A. GENERAL
	1. Manufacturer & Country of origin. (Shall be as per approved QA make)
	2. Equipment driven by motor
	3. Motor type
	4. Quantity
	B. DESIGN AND PERFORMANCE DATA
	1. Frame size
	2. Type of duty
	3. Type of enclosure /Method of cooling/Degree of protection
	4. Applicable standard to which motor generally conforms
	5. Efficiency class as per IS 12615
	6. (a) Whether motor is flame proof Yes/No
	(b) If yes, the gas group to which it conforms as per IS:2148
	7. Type of mounting
	8. Direction of rotation as viewed from DE END
	9. Standard continuous rating at 40 deg.C. ambient temp. as per Indian Standard (KW)
	10. Derated rating for specified normal condition i.e. 50 deg. C ambient temperature (KW)

Clause No.	MOTORS
	..... (Bidder's Name)
	11. Maximum continuous load demand of driven equipment in KW
	12. Rated Voltage (volts)
	13. Permissible variation of :
	a. Voltage (Volts)
	b. Frequency (Hz)
	c. Combined voltage and frequency
	14. Rated speed at rated voltage and frequency(RPM)
	15. At rated Voltage and frequency:
	a. Full load current
	b. No load current
	16. Power Factor at
	a. 100% load
	b. NO load
	c. Starting.
	17. Efficiency at rated voltage and frequrecy,
	a. 100% load
	b. 75% load
	c. 50% load
	18. Starting current (amps) at
	a. 100 % voltage
	b. 85% voltage

Clause No.	MOTORS
	..... (Bidder's Name)
	c. 80% voltage
	19. Minimum permissible starting Voltage (Volts)
	20. Starting time with minimum permissible voltage
	a. Without driven equipment coupled
	b. With driven equipment coupled
	21. Safe stall time with 100% and 110% of rated voltage
	a. From hot condition
	b. From cold condition
	22. Torques :
	a. Starting torque at min. permissible voltage(kg-mtr.)
	b. Pull up torque at rated voltage.
	c. Pull out torque
	d. Min accelerating torque (kg.m) available
	e. Rated torque (kg.m)
	23. Stator winding resistance per phase (ohms at 20 Deg.C.)
	24. GD^2 value of motors
	25. No of permissible successive starts when motor is in hot condition

Clause No.	MOTORS
	..... (Bidder's Name) 26. Locked Rotor KVA Input 27. Locked Rotor KVA/KW 28. Vibration limit :Velocity (mm/s) 29. Noise level limit (dBA) **C. CONSTRUCTIONAL FEATURES** 1. Stator winding insulation a. Class & Type b. Winding Insulation Process c. Tropicalised (Yes/No) d. Temperature rise over specified maximum ambient temperature of 50 deg C e. Method of temperature measurement f. Stator winding connection 2. Main Terminal Box a. Type b. Location (viewed from NDE side) c. Entry of cables(bottom/side) d. Recommended cable size (To be matched with cable size envisaged by owner) e. Fault level (MVA), Fault level duration (sec) f. Cable glands & lugs details (shall be suitable for power cable)

Clause No.	MOTORS
	..... (Bidder's Name) 3. Type of DE/NDE Bearing 4. Motor Paint shade 5. Weight of a. Motor stator (KG) b. Motor Rotor (KG) c. Total weight (KG) **D. List of accessories.** 1. Space Heaters (Applicable for 30 KW & above motor) (Nos./Power in watts/supply voltage) 2. Terminal Box for Space Heater (Yes/No) 3. Speed switch (Yes/No) No of contacts and contact ratings of speed switch 4. Insulation of bearing (Yes/No) 5. Noise reducer(Yes/No) 6. Grounding pads i) No and size on motor body ii) Nos on terminal Box 7. Vibration pads i) Nos and size ii) Location 8. Any other fitments

Clause No.	MOTORS

.....
(Bidder's Name)

E. List of curves.

1. Torque speed characteristic of the motor
2. Thermal withstand characteristic
3. Starting. current Vs. Time
4. Starting. current Vs speed
5. P.F. and Effi. Vs Load

F. Additional Data to be filled for each rating of DC Motor

1. Rated armature voltage (Volt)
2. Rated field excitation (Amp)
3. Permissible % variation in voltage
4. Minimum Permissible Starting voltage (volt)
5. At rated voltage
   - i) Full load Armature current.(Amp)
   - ii) Full load Field current (Amp)
   - iii) No load Armature current (Amp)
6. Full load Field current (Amp)
7. No load Aramature current (Amp)
8. Minimum permissible field current(Amp) to avoid overspeeding at
   - i) Maximum permissible voltage

Clause No.	MOTORS
	..... (Bidder's Name) ii) Rated voltage iii) Minimum Permissible Voltage 9. Resistance (indicative Values) in ohm i) Armature winding (Arm + IP + Series) at 25 deg.C ii) Field Winding at 25 deg. C 10. Inductance (indicative values) i) Armature winding ii) Field winding 11. Value of trimmer resistance (ohm) to be connected in series with the shunt field to obtain rated speed at i) 220 V DC ii) 250 V DC iii) 187 V DC 12. Value of the external resistance (ohm) required to be connected in series with armature during starting only 13. Technical data sheet for external resistance box 14. GA drawing of motor 15. Starting time calculation 16. Starter resistance design calculation 17. Electrical connection diagram of motor

.....
(Bidder's Name)

POWER AND CONTROL CABLES
(Use separate sheet for each type and size of cables)

1.00.00	Make (Shall be as per approved QA make)	.....	.....
1.02.00	Country of Manufacturer	.....	.....
1.03.00	Type & designation	.....	.....
1.04.00	Applicable standard	.....	.....
1.05.00	Cable size & no. of cores	.....	.....
1.06.00	Rated voltage	.....	.....
1.07.00	Catalogue attached as Annexure No.	.....	.....
1.08.00	Continuous current rating for max. conductor temperature	.....	.....
	a) When laid in air at an ambient temperature of 50 deg. C	.....	.....
	b) When buried in soil having thermal resistivity of 150 deg.C cm/n at a depth of 1000 mm at ground ambient temperature of 40 deg. C	.....	.....
1.09.00	Short circuit withstand capacity and duration for	.....	.....
	a) Conductor	.....	.....
	b) Screen	.....	.....
	c) Armour	.....	.....
1.10.00	Conductor	.....	.....
	a) Material	.....	.....
	b) Nominal cross section area in sq. mm	.....	.....

		..... (Bidder's Name)
	c) Shape of conductor	....
	d) DC resistance at 20°C (Maxm.)	....
1.11.00	Insulation	
	a) Material	....
	b) Nominal thickness (in mm)	....
	c) Type of curing (for XLPE)	....
1.12.00	Metallic screen (wherever applicable)	
	a) Material	....
	b) Type	....
	c) Short Ckt. (KA) & Period (Sec.)	
1.13.00	Material & Type of Inner sheath	....
1.14.00	Armour material & shape	....
1.15.00	Outer sheath material & type	....
1.16.00	Over all dia of cable (in mm)	....
1.17.00	Guaranteed value of minimum oxygen index of outer sheath	....
1.18.00	Maximum acid-gas generation by weight (%) of outer sheath	....
1.19.00	Smoke Density rating of outer sheath	....

MOTORS

1.00.00 GENERAL REQUIREMENTS

1.01.00 For the purpose of design of equipment/systems, an ambient temperature of 50 deg. Centigrade and relative humidity of 95% (at 40 deg C) shall be considered. The equipment shall operate in a highly polluted environment.

1.02.00 All equipments shall be suitable for rated frequency of 50 Hz with a variation of +3% & -5%, and 10% combined variation of voltage and frequency unless specifically brought out in the specification.

1.03.00 Contractor shall provide fully compatible electrical system, equipments, accessories and services.

1.04.00 All the equipment, material and systems shall, in general, conform to the latest edition of relevant National and international Codes & Standards, especially the Indian Statutory Regulations.

1.05.00 The auxiliary AC voltage supply arrangement shall have 11 kV, 3.3 kV and 415V systems. It shall be designed to limit voltage variations as given below under worst operating condition :

a) 11kV, 3.3 kV +/- 6%

b) 415/240V +/- 10%

1.06.00 The voltage level for motors shall be as follows :-

a) Upto 0.2KW : Single phase 240V AC / 3 phase 415V AC

b) Above 0.2KW and upto 200KW : 3 phase 415V AC

c) Above 200KW and upto 1500 KW: 3.3 kV

d) Above 1500 KW : 11 kV

1.07.00 Fault level shall be limited to 40kA RMS for 1 second for 11kV & 3.3 kV system and 45 kA RMS 1 second for 415V system. 415V system shall be solidly grounded and 220 VDC system shall be isolated type.

1.08.00 Paint shade shall be as per RAL 5012 (Blue) for indoor and outdoor equipment.

1.09.00 The responsibility of coordination with electrical agencies and obtaining all necessary clearances shall be of the contractor.

1.10.00 **Degree of Protection**

Degree of protection for various enclosures as per IS:4691, IEC60034-05 shall be as follows :-

i)	Indoor motors	-	IP 54
ii)	Outdoor motors	-	IP 55
iii)	Cable box-indoor area	-	IP 54
iv)	Cable box-Outdoor area	-	IP 55

2.00.00 CODES AND STANDARDS

1)	Three phase induction motors	:	IS:325, IEC:60034
2)	Single phase AC motors	:	IS:996, IEC:60034
3)	Crane duty motors	:	IS:3177, IEC:60034
4)	DC motors/generators	:	IS:4722
5)	Energy Efficient motors	:	IS 12615

3.00.00 TYPE

3.01.00 **AC Motors:**

a) Squirrel cage induction motor suitable for direct-on-line starting.

b) Continuous duty LT motors upto 160 KW Output rating (at 50 deg.C ambient temperature), shall be Energy Efficient motors, Efficiency class-Eff 1, conforming to IS 12615.

c) Crane duty motors shall be slip ring/ squirrel cage Induction motor as per the requirement.

3.02.00 DC Motors Shunt wound.

4.00.00 **RATING**

(a) Continuously rated (S1). However, crane motors shall be rated for S4 duty, 40% cyclic duration factor.

(b) Whenever the basis for motor ratings are not specified in the corresponding mechanical specification sub-sections, maximum continuous motor ratings shall be at least 10% above the maximum load demand of the driven equipment under entire operating range including voltage and frequency variations.

5.00.00 **TEMPERATURE RISE**

Air cooled motors

70 deg. C by resistance method for both thermal class 130(B) & 155(F) insulation.

Water cooled

80 deg. C over inlet cooling water temperature mentioned elsewhere, by resistance method for both thermal class 130(B) & 155(F) insulation.

41 deg.C over inlet cooling water maximum temperature of 39 deg.C for thermal class Y wet wound Boiler circulation pump motor.

6.00.00 **OPERATIONAL REQUIREMENTS**

6.01.00 **Starting Time**

6.01.01 For motors with starting time upto 20 secs. at minimum permissible voltage during starting, the locked rotor withstand time under hot condition at highest voltage limit shall be at least 2.5 secs. more than starting time.

6.01.02 For motors with starting time more than 20 secs. and upto 45 secs. at minimum permissible voltage during starting, the locked rotor withstand time under hot condition at highest voltage limit shall be at least 5 secs. more than starting time.

6.01.03 For motors with starting time more than 45 secs. at minimum permissible voltage during starting, the locked rotor withstand time under hot condition at highest voltage limit shall be more than starting time by at least 10% of the starting time.

6.01.04 Speed switches mounted on the motor shaft shall be provided in cases where above requirements are not met.

6.02.00 **Torque Requirements**

6.02.01 Accelerating torque at any speed with the lowest permissible starting voltage shall be at least 10% motor full load torque.

6.02.02 Pull out torque at rated voltage shall not be less than 205% of full load torque. It shall be 275% for crane duty motors.

6.03.00 **Starting voltage requirement**

(a) 85% up to 1500KW (except for AOP motor which is 80%)

(b) 80% from 1501 KW to 4000KW

(c) 75% > 4000KW

7.00.00 DESIGN AND CONSTRUCTIONAL FEATURES

7.01.00 Suitable single phase space heaters shall be provided on motors rated 30KW and above to maintain windings in dry condition when motor is standstill. Separate terminal box for space heaters & RTDs shall be provided. However for flame proof motors , space heater terminals inside the main terminal box may be acceptable.

7.02.00 All motors shall be either Totally enclosed fan cooled (TEFC) or totally enclosed tube ventilated (TETV) or Closed air circuit air cooled (CACA) type. However, motors rated 3000KW or above can be Closed air circuit water cooled (CACW). CW motors can be screen protected drip proof (SPDP) type. Motors located in hazardous areas shall have flame proof enclosures conforming to IS:2148 as detailed below

(a)	Fuel oil area	:	Group – IIB
(b)	Hydrogen generation plant area	:	Group - IIC (or Group-I, Div-II as per NEC)

7.03.00 **Winding and Insulation**

(a)	Type	:	Non-hygroscopic, oil resistant, flame resistant
(b)	Starting duty	:	Two hot starts in succession, with motor initially at normal running temperature. However the conveyor motor shall be suitable for 3 consecutive hot starts.

(c) 11kV & 3.3 kV AC motors : Thermal class 155 (F) insulation.

The winding insulation process shall be total Vacuum Pressure Impregnated i.e resin poor method. The lightning Impulse & interturn insulation surge withstand level shall be as per IEC-60034 part-15

(d) 240VAC, 415V AC & 220V DC motors : Thermal Class(B) or better

7.04.00 Motors rated above 1000KW shall have insulated bearings to prevent flow of shaft currents.

7.05.00 Motors with heat exchangers shall have dial type thermometer with adjustable alarm contacts to indicate inlet and outlet primary air temperature.

7.06.00 Noise level for all the motors shall be limited to 85dB(A) except for BFP motor for which the maximum limit shall be 90dB(A). Vibration shall be limited within the limits prescribed in IS:12075 / IEC 60034-14 . Motors shall withstand vibrations produced by driven equipment. HT motor bearing housings shall have flat surfaces, in both X and Y directions, suitable for mounting 80mmX80mm vibration pads.

7.07.00 In HT motors, at least four numbers simplex / two numbers duplex platinum resistance type temperature detectors shall be provided in each phase stator winding. Each bearing of HT motor shall be provided with dial type thermometer with adjustable alarm contact and preferably 2 numbers duplex platinum resistance type temperature detectors.

7.08.00 Motor body shall have two earthing points on opposite sides.

7.09.00 HT motors can be offered with either elastimould termination or dust tight phase separated double walled (metallic as well as insulated barrier) cable boxes. In case elastimould terminations are offered, then protective cover and trifurcating sleeves shall also be provided. In case cable box is offered, then Employer shall provide termination kit. Removable gland plates of thickness 3 mm (hot/cold rolled sheet steel) or 4 mm (non magnetic material for single core cables) shall be provided in case of cable boxes.

7.10.00 The spacing between gland plate & centre of terminal stud shall be as per Table-I.

7.11.00 All motors shall be so designed that maximum inrush currents and locked rotor and pullout torque developed by them at extreme voltage and frequency variations do not endanger the motor and driven equipment.

7.12.00 The motors shall be suitable for bus transfer schemes provided on the11 kV, 3.3kV /415V systems without any injurious effect on its life.

7.13.00 For motors rated 2000 KW & above, neutral current transformers of PS class shall be provided on each phase in a separate neutral terminal box.

7.14.00 11kV and 3.3 kV motor Terminal Box shall be suitable for fault level of 750MVA for 0.12 sec and 250 MVA for 0.12 sec respectively. Elastimould termination kit shall be suitable for fault level of 25 KA for 0.17 seconds.

7.15.00 The size and number of cables (for HT and LT motors) to be intimated to the successful bidder during detailed engineering and the contractor shall provide terminal box suitable for the same.

8.00.00 The ratio of locked rotor KVA at rated voltage to rated KW shall not exceed the following (without any further tolerance).

(a) Upto 110KW : 11.0 (For AOP motor it shall be 8.0)

(b) Above 110KW & upto 1500KW : 10.0

(c) Above 1500KW & upto 4000KW : 9.0

(d) Above 4000KW : 6 to 6.5

10.00.00 TYPE TEST

10.01.00 **HT MOTORS**

10.01.01 The contractor shall carry out the type tests as listed in this specification on the equipment to be supplied under this contract. The bidder shall indicate the charges for each of these type tests separately in the relevant schedule of Section - VII-(BPS) and the same shall be considered for the evaluation of the bids. The type tests charges shall be paid only for the test(s) actually conducted successfully under this contract and upon certification by the employer's engineer.

10.01.02 The type tests shall be carried out in presence of the employer's representative, for which minimum 15 days notice shall be given by the contractor. The contractor shall obtain the employer's approval for the type test procedure before conducting the type test. The type test procedure shall clearly specify the test set–up, instruments to

be used, procedure, acceptance norms, recording of different parameters, interval of recording, precautions to be taken etc. for the type test(s) to be carried out.

10.01.03 In case the contractor has conducted such specified type test(s) within last ten years as on the date of bid opening, he may submit during detailed engineering the type test reports to the owner for waival of conductance of such test(s). These reports should be for the tests conducted on the equipment similar to those proposed to be supplied under this contract and test(s) should have been either conducted at an independent laboratory or should have been witnessed by a client. The owner reserves the right to waive conducting of any or all the specified type test(s) under this contract. In case type tests are waived, the type test charges shall not be payable to the contractor.

10.01.04 Further the Contractor shall only submit the reports of the type tests as listed in "LIST OF TESTS FOR WHICH REPORTS HAVE TO BE SUBMITTED" and carried out within last ten years from the date of bid opening. These reports

should be for the test conducted on the equipment similar to those proposed to be supplied under this contract and the test(s) should have been either conducted at an independent laboratory or should have been witnessed by a client. However if the contractor is not able to submit report of the type test(s) conducted within last ten years from the date of bid opening, or in the case of type test report(s) are not found to be meeting the specification requirements, the contractor shall conduct all such tests under this contract at no additional cost to the owner either at third party lab or in presence of client/owners representative and submit the reports for approval.

10.01.05 **LIST OF TYPE TESTS TO BE CONDUCTED**

The following type tests shall be conducted on each type and rating of HT motor

(a) No load saturation and loss curves upto approximately 115% of rated voltage

(b) Measurement of noise at no load.

(c) Momentary excess torque test (subject to test bed constraint).

(d) Full load test(subject to test bed constraint)

(e) Temperature rise test at rated conditions. During heat run test, bearing temp., winding temp.,coolant flow and its temp. shall also be measured. In case the temperature rise test is carried at load other than rated load, specific approval for the test method and procedure is required to be

obtained. Wherever ETD's are provided, the temperature shall be measured by ETD's also for the record purpose.

(f) Lightning Impulse withstand test on the sample coil shall be as per IEC-60034, part-15

(g) Surge-withstand test on interturn insulation shall be as per clause no. 5.1.2 of IEC 60034, part-15

10.01.06 **LIST OF TESTS FOR WHICH REPORTS HAVE TO BE SUBMITTED**

The following type test reports shall be submitted for each type and rating of HT motor

(a) Degree of protection test for the enclosure followed by IR, HV and no load run test.

(b) Terminal box-fault level withstand test for each type of terminal box of HT motors only.

10.02.00 **LT Motors**

10.02.01 LT Motors supplied shall be of type tested design. During detailed engineering, the contractor shall submit for Owner's approval the reports of all the type tests as listed in this specification and carried out within last *ten* years from the date of bid opening. These reports should be for the test conducted on the equipment similar to those proposed to be supplied under this contract and the test(s) should have been either conducted at an independent laboratory or should have been witnessed by a client.

10.02.02 However if the contractor is not able to submit report of the type test(s) conducted within last ten years from the date of bid opening, or in the case of type test report(s) are not found to be meeting the specification requirements, the contractor shall conduct all such tests under this contract at no additional cost to the owner either at third party lab or in presence of client/owners representative and submit the reports for approval.

10.02.03 **LIST OF TESTS FOR WHICH REPORTS HAVE TO BE SUBMITTED**

The following type test reports shall be submitted for each type and rating of LT motor of above 50 KW only

1. Measurement of resistance of windings of stator and wound rotor.

2. No load test at rated voltage to determine input current power and speed

3. Open circuit voltage ratio of wound rotor motors (in case of Slip ring motors)

4. Full load test to determine efficiency power factor and slip .

5. Temperature rise test .

6. Momentary excess torque test.

7. High voltage test .

8. Test for vibration severity of motor.

9. Test for noise levels of motor(Shall be limited as per clause no 7.06.00 of this section)

10. Test for degree of protection and

11. Overspeed test.

10.03.00 All acceptance and routine tests as per the specification and relevant standards shall be carried out. Charges for these shall be deemed to be included in the equipment price.

10.04.00 The type test reports once approved for any projects shall be treated as reference. For subsequent projects of NTPC, an endorsement sheet will be furnished by the manufacturer confirming similarity and “No design Change”. Minor changes if any shall be highlighted on the endorsement sheet.

TABLE – I

DIMENSIONS OF TERMINAL BOXES FOR LV MOTORS

Motor MCR in KW	**Minimum distance between centre of stud and gland plate in mm**
UP to 3 KW	**As per manufacturer's practice.**
Above 3 KW - upto 7 KW	85
Above 7 KW - upto 13 KW	115
Above 13 KW - upto 24 KW	167
Above 24 KW - upto 37 KW	196
Above 37 KW - upto 55 KW	249
Above 55 KW - upto 90 KW	277
Above 90 KW - upto 125 KW	331
Above 125 KW-upto 200 KW	203

For HT motors the distance between gland plate and the terminal studs shall not be less than 500 mm.

PHASE TO PHASE/ PHASE TO EARTH AIR CLEARANCE:

NOTE: Minimum inter-phase and phase-earth air clearances for LT motors with lugs installed shall be as follows:

Motor MCR in KW	**Clearance**
UP to 110 KW	10mm
Above 110 KW and upto 150 KW	12.5mm
Above 150 KW	19mm

LT POWER CABLES

1.00.00 CODES & STANDARDS

1.01.00 All standards, specifications and codes of practice referred to herein shall be the latest editions including all applicable official amendments and revisions as on date of opening of bid. In case of conflict between this specification and those (IS : codes, standards, etc.) referred to herein, the former shall prevail. All the cables shall conform to the requirements of the following standards and codes:

IS :1554 - I	PVC insulated (heavy duty) electric cables for working voltages upto and including 1100V.
IS : 3961	Recommended current ratings for cables
IS : 3975	Low carbon galvanised steel wires, formed wires and tapes for armouring of cables.
IS : 5831	PVC insulation and sheath of electrical cables.
IS:7098 (Part -I)	Cross linked polyethylene insulated PVC sheathed cables for working voltages upto and including 1100V.
IS : 8130	Conductors for insulated electrical cables and flexible cords.
IS : 10418	Specification for drums for electric cables.
IS : 10810	Methods of tests for cables.
ASTM-D -2843	Standard test method for density of smoke from the burning or decomposition of plastics.
IEC-754 (Part-I)	Tests on gases evolved during combustion of electric cables.
IEC-332	Tests on electric cables under fire conditions. Part-3: Tests on bunched wires or cables (Category-B).

2.00.00 TECHNICAL REQUIREMENTS

2.01.00 The cables shall be suitable for laying on racks, in ducts, trenches, conduits and under ground buried installation with chances of flooding by water.

2.02.00 Cables shall be flame retardant, low smoke (FRLS) type designed to withstand all mechanical, electrical and thermal stresses developed under steady state and transient operating conditions as specified elsewhere in this specification.

2.03.00 Aluminium conductor used in power cables shall have tensile strength of more than 100 N/ sq.mm. Conductors shall be stranded.

2.04.00 XLPE insulation shall be suitable for a continuous conductor temperature of 90 deg. C and short circuit conductor temperature of 250 deg C. PVC insulation shall be suitable for continuous conductor temperature of 70 deg C and short circuit conductor temperature of 160 deg. C.

2.05.00 The cable cores shall be laid up with fillers between the cores wherever necessary. It shall not stick to insulation and inner sheath. All the cables, other than single core unarmoured cables, shall have distinct extruded PVC inner sheath of black colour as per IS : 5831.

2.06.00 For single core armoured cables, armouring shall be of aluminium wires/ formed wires. For multicore armoured cables, armouring shall be of galvanised steel as follows :

Calculated nominal dia. of cable under armour	**Size and Type of armour**
Upto 13 mm	1.4mm dia GS wire
Above 13 & upto 25mm	0.8 mm thick GS formed wire / 1.6 mm dia GS wire
Above 25 & upto 40 mm	0.8mm thick GS formed wire / 2.0mm dia GS wire
Above 40 & upto 55mm	1.4 mm thick GS formed wire /2.5mm dia GS wire
Above 55 & upto 70 mm	1.4mm thick GS formed wire / 3.15mm dia GS wire
Above 70mm	1.4 mm thick GS formed wire / 4.0 mm dia GS wire

2.06.01 The aluminium used for armouring shall be of H4 grade as per IS: 8130 with maximum resistivity of 0.028264 ohm mm^2 per meter at 20 deg C. The sizes of aluminium armouring shall be same as indicated above for galvanized steel.

2.06.02 The gap between armour wires / formed wires shall not exceed one armour wire / formed wire space and there shall be no cross over / over-riding of armour wire / formed wire. The minimum area of coverage of armouring shall be 90%. The breaking load of armour joint shall not be less than 95% of that of armour wire / formed wire. Zinc rich paint shall be applied on armour joint surface of G.S.wire/ formed wire.

2.07.00 Outer sheath shall be of PVC as per IS: 5831 & black in colour. In addition to meeting all the requirements of Indian standards referred to, outer sheath of all the cables shall have the following FRLS properties.

(a.) Oxygen index of min. 29 (as per IS 10810 Part-58).

(b.) Acid gas emission of max. 20% (as per IEC-754-I).

(c.) Smoke density rating shall not be more than 60 % (as per ASTMD-2843).

2.08.00 Cores of the cables shall be identified by colouring of insulation. Following colour scheme shall be adopted:

1 core - Red, Black, Yellow or Blue

2 core - Red & Black

3 core - Red, Yellow & Blue

4 core - Red, Yellow, Blue and Black

2.09.00 For reduced neutral conductors, the core shall be black.

2.10.00 In addition to manufacturer's identification on cables as per IS, following marking shall also be provided over outer sheath.

(a.) Cable size and voltage grade - To be embossed

(b.) Word 'FRLS' at every 5 metre - To be embossed

(c.) Sequential marking of length of the cable in metres at every one metre -To be embossed / printed

The embossing shall be progressive, automatic, in line and marking shall be legible and indelible.

2.11.00 All cables shall meet the fire resistance requirement as per Category-B of IEC 332 Part-3.

2.12.00 Allowable tolerances on the overall diameter of the cables shall be +\-2 mm maximum, over the declared value in the technical data sheets.

2.13.00 In plant repairs to the cables shall not be accepted. Pimples, fish eye, blow holes etc. are not acceptable.

3.00.00 **CABLE SELECTION & SIZING**

3.01.00 LT Power cables shall be sized based on the following considerations:

(a) Rated current of the equipment

(b) The voltage drop in the cable, during motor starting condition, shall be limited to 10% and during full load running condition, shall be limited to 3% of the rated voltage

(c) Short circuit withstand capability

This will depend on the feeder type. For a fuse protected circuit, cable should be sized to withstand the let out energy of the fuse. For breaker controlled feeder, cable shall be capable of withstanding the system fault current level for total breaker tripping time inclusive of relay pickup time.

(d) The minimum conductor size shall be 6 sqmm for aluminium conductor cables and 2.5 sqmm for copper conductor cables. The constructional details of copper conductor cables shall be same as indicated for copper control cable.

302.00 Derating Factors

Derating factors for various conditions of installations including the following shall be considered while selecting the cable sizes:

a) Variation in ambient temperature for cables laid in air

b) Grouping of cables

c) Variation in ground temperature and soil resistivity for buried cables.

3.03.00 Cable lengths shall be considered in such a way that straight through cable joints are avoided.

3.04.00 Cables shall be armoured type if laid in switchyard area or directly buried.

3.05.00 All LT power cables of sizes more than 120 sq.mm. shall be XLPE insulated and preferable sizes are 1Cx150, 1Cx300, 1Cx630, 3Cx150 & 3Cx240 sq.mm.

4.00.00 **CONSTRUCTIONAL FEATURES**

(a.) **1.1 KV grade XLPE power cables** shall have compacted aluminium conductor, XLPE insulated, PVC inner sheathed (as applicable), armoured/ unarmoured, FRLS PVC outer sheathed conforming to IS:7098. (Part-I).

(b.) **1.1KV grade PVC power cables** shall have aluminium conductor (compacted type for sizes above 10 sq.mm), PVC Insulated, PVC inner sheathed, armoured/ unarmoured, FRLS PVC outer sheathed conforming to IS:1554 (Part-I).

5.00.00 CABLE DRUMS

(a) Cables shall be supplied in non returnable wooden or steel drums of heavy construction. The surface of the drum and the outer most cable layer shall be covered with water proof cover. Both the ends of the cables shall be properly sealed with heat shrinkable PVC/ rubber caps secured by 'U' nails so as to eliminate ingress of water during transportation, storage and erection. Wood preservative anti-termite treatment shall be applied to the entire drum. Wooden drums shall comply with IS: 10418.

(b) Each drum shall carry manufacturer's name, purchaser's name, address and contract number, item number and type, size and length of cable and net gross weight stencilled on both sides of the drum. A tag containing same information shall be attached to the leading end of the cable. An arrow and suitable accompanying wording shall be marked on one end of the reel indicating the direction in which it should be rolled.

(c) The standard drum length for power cables shall not be less than 500 meters. The length per drum shall be subjected to a maximum tolerance of +/- 5% of the standard drum length. The Employer shall have the option of rejecting cable drum with shorter lengths. For each size, the variance of total quantity, adding all the supplied drum lengths, from the ordered quantity, shall not exceed +/- 2%.

5.00.00 TYPE TESTS

5.01.00 General

All equipments to be supplied shall be of type tested design. During detailed engineering, the contractor shall submit for Owner's approval the reports of all the type tests as listed in this specification and carried out within last ten years from the date of bid opening. These reports should be for the test conducted on the equipment similar to those proposed to be supplied under this contract and the test(s) should have been either conducted at an independent laboratory or should have been witnessed by a client.

However if the contractor is not able to submit report of the type test(s) conducted within last ten years from the date of bid opening, or in the case of type test report(s) are not found to be meeting the specification requirements, the contractor shall conduct all such tests under this contract at no additional cost to the owner either at

third party lab or in presence of client /owners representative and submit the reports for approval.

All acceptance and routine tests as per the specification and relevant standards shall be carried out. Charges for these shall be deemed to be included in the equipment price.

The type test reports once approved for any projects shall be treated as reference. For subsequent projects of NTPC, an endorsement sheet will be furnished by the manufacturer confirming similarity and "No design Change". Minor changes if any shall be highlighted on the endorsement sheet.

5.02.00 **Type Tests**

5.02.01 The reports for the following type tests shall be submitted for one size each of LT XLPE and LT PVC Power cables. Size shall be decided by the employer during detailed engineering :

S.No.	Type test	Remarks
	For Conductor	
1.	Resistance test	
2.	Tensile test	For circular non-compacted conductors only
3.	Wrapping test	For circular non-compacted only
	For Armour Wires/ Formed Wires	
4.	Measurement of Dimensions	
5.	Tensile Test	
6.	Elongation test	
7.	Torsion test	For round wires only
8.	Wrapping test	For aluminium wires / formed wires only.
9.	Resistance test	
10(a)	Mass of zinc coating test	For GS Formed wires/wires only

10(b)	Uniformity of zinc coating	For GS Formed wires /wires only
11.	Adhesion test	For GS Formed wires/wires only
	For PVC/XLPE insulation & PVC Sheath	
12.	Test for thickness	
13.	Tensile strength & elongation tests	before ageing and after ageing
14.	Ageing in air oven	
15.	Loss of mass test	For PVC insulation and sheath only
16.	Hot deformation test	For PVC insulation and sheath only
17.	Heat shock test	For PVC insulation and sheath only
18.	Shrinkage test	
19.	Thermal stability test	For PVC insulation and sheath only
20.	Hot set test	For XLPE insulation only
21.	Water absorption test	For XLPE insulation only
22.	Oxygen index test	For outer sheath only
23.	Smoke density test	For outer sheath only
24.	Acid gas generation test	For outer sheath only
	For completed cables	
25.	Insulation resistance test	
	(Volume resistivity method)	
26.	High voltage test	
27.	Flammability test as per IEC-332 Part-3 (Category-B)	

5.02.02	**Acceptance Tests** (as per QA table)
5.02.03	**Routine Tests** (as per QA table)

LT CONTROL CABLES

1.00.00 CODES & STANDARDS

1.01.00 All standards, specifications and codes of practice referred to herein shall be the latest editions including all applicable official amendments and revisions as on date of opening of bid. In case of conflict between this specification and those (IS : codes, standards, etc.) referred to herein, the former shall prevail. All the cables shall conform to the requirements of the following standards and codes :

IS:1554 - I	PVC insulated (heavy duty) electric cables for working voltages upto and including 1100V.
IS: 3961	Recommended current ratings for cables
IS: 3975	Low carbon galvanised steel wires, formed wire and tapes for armouring of cables.
IS: 4905	Methods for random sampling.
IS: 5831	PVC insulation and sheath of electrical cables.
IS: 8130	Conductors for insulated electrical cables and flexible cords.
IS: 10418	Specification for drums for electric cables.
IS: 10810	Methods of tests for cables.
ASTM-D -2843	Standard test method for density of smoke from the burning or decomposition of plastics.
IEC-754 (Part-I)	Test on gases evolved during combustion of electric cables.
IEC -332	Tests on Electric cables under fire conditions Part-3: Tests on bunched wires or cables (category -B)

2.00.00 TECHNICAL REQUIREMENTS

2.01.00 The cables shall be suitable for laying on racks, in ducts, trenches, conduits and under ground buried installation with chances of flooding by water.

2.02.00 Cables shall be flame retardant, low smoke (FRLS) type designed to withstand all mechanical, electrical and thermal stresses develop under steady state and transient operating conditions as specified elsewhere in this specification.

2.03.00 Conductor of control cables shall be made of multi stranded, plain annealed copper.

2.04.00 PVC insulation shall be suitable for continuous conductor temperature of 70 deg C and short circuit conductor temperature of 160 deg. C.

2.05.00 The cable cores shall be laid up with fillers between the cores wherever necessary. It shall not stick to insulation and inner sheath. All the cables, other than single core unarmoured cables, shall have distinct extruded PVC inner sheath of black colour as per IS : 5831.

2.06.00 For multicore armoured cables, the armouring shall be of galvanised steel as follows :-

	Calculated nominal dia of cable under armour	**Size and Type of armour**
1)	Upto 13 mm	1.4mm dia GS wire
2)	Above 13 upto 25 mm	0.8 mm thick GS formed wire / 1.6 mm dia GS wire
3)	Above 25 upto 40 mm	0.8mm thick GS formed wire / 2.0mm dia GS wire
4)	Above 40 upto 55mm	1.4 mm thick GS formed wire/ 2.5mm dia GS wire
5)	Above 55 upto 70 mm	1.4mm thick GS formed wire / 3.15mm dia GS wire
6)	Above 70mm	1.4 mm thick GS formed wire / 4.0 mm dia GS wire

The gap between armour wire / formed wire shall not exceed one armour wire / formed wire space and there shall be no cross over / over-riding of armour wire / formed wire. The minimum area of coverage of armouring shall be 90%. The breaking load of armour joint shall not be less than 95% of that of armour wire / formed wire. Zinc rich paint shall be applied on armour joint surface.

2.07.00 Outer sheath shall be of PVC(grade as applicable) and grey in colour . In addition to meeting all the requirements of Indian standards referred to, outer sheath of all the cables shall have the following FRLS properties.

(a) Oxygen index of min. 29 (As per IS:10810 (part-58))

(b) Acid gas emission of max. 20% (As per IEC-754-I).

(c) Smoke density rating shall not be more than 60% during Smoke Density Test as per ASTMD-2843.

2.08.00 Cores of the cables of upto 5 cores shall be identified by colouring of insulation. Following colour scheme shall be adopted.

1 core - Red, Black, Yellow or Blue

2 core - Red & Black

3 core - Red, Yellow & Blue

4 core - Red, Yellow, Blue and Black

5 core - Red, Yellow, Blue, Black and Grey

2.09.00 For cables having more than 5 cores, core identification shall be done by numbering the insulation of cores sequentially, starting by number 1 in the inner layer (e.g. say for 10 core cable, core numbering shall be from 1 to 10). The number shall be printed in Hindu-Arabic numerals on the outer surfaces of the cores. All the numbers shall be of the same colour, which shall contrast with the colour of insulation. The colour of insulation for all the cores shall be grey only. The numerals shall be legible and indelible. The numbers shall be repeated at regular intervals along the core, consecutive numbers being inverted in relation to each other. When the number is a single numeral, a dash shall be placed under neath it. If the number consists of two numerals, these shall be disposed one below the other and a dash placed below the lower numeral. The spacing between consecuture numbers shall not exceed 50 mm.

2.10.00 In addition to manufacturer's identification on cables as per IS, following marking shall also be provided over outer sheath :

(a) Cable size and voltage grade - To be embossed

(b) Word 'FRLS' at every 5 metre - To be embossed

(c) Sequential marking of length of the cable in metres at every one metre. - To be embossed / printed.

The embossing / printing shall be progressive, automatic, in line and marking shall be legible and indelible.

2.11.00 All cables shall meet the fire resistance requirement as per Category-B of IEC 332 Part -3.

2.12.00 Allowable tolerances on the overall diameter of the cables shall be +\-2 mm maximum over the declared value in the technical data sheets.

2.13.00 In plant repairs to the cables shall not be accepted. Pimples, fish eye, blow holes etc. are not acceptable.

2.14.00 **Cable selection & sizing**

2.14.01 LT Control cables shall be sized based on the following considerations:

(a) Rated current of the equipment

(b) The voltage drop in the cable, during motor starting condition, shall be limited to 10% and during full load running condition, shall be limited to 3% of the rated voltage

(c) Short circuit withstand capability

This will depend on the feeder type. For a fuse protected circuit, cable should be sized to withstand the let out energy of the fuse.For breaker controlled feeder, cable shall be capable of withstanding the system fault current level for total breaker tripping time inclusive of relay pickup time.

(d) The minimum size of conductor shall be 1.5 sqmm

2.14.02 Derating Factors

Derating factors for various conditions of installations including the following shall be considered while selecting the cable sizes:

a) Variation in ambient temperature for cables laid in air

b) Grouping of cables

c) Variation in ground temperature and soil resistivity for buried cables.

2.14.03 Cable lengths shall be considered in such a way that straight through cable joints are avoided.

2.14.04 Cables shall be armoured type if laid in switchyard area or directly buried.

3.00.00 CONSTRUCTIONAL FEATURES

3.01.00 **1.1 KV Grade Control Cables**

Control Cables shall have stranded copper conductor multicore PVC insulated, PVC inner-sheathed, armoured / unarmoured, PVC outer-sheathed conforming to IS:1554. (Part-I).

3.02.00 **Cable Drums**

(a) Cables shall be supplied in non returnable wooden or steel drums of heavy construction. The surface of the drum and the outer most cable layer shall be covered with water proof layer. Both the ends of the cables shall be properly sealed with heat shrinkable PVC/ rubber caps secured by 'U' nails so as to eliminate ingress of water during transportation, storage and erection. Wood preservative anti-termite treatment shall be applied to the entire drum. Wooden drums shall comply with IS : 10418.

(b) Each drum shall carry manufacturer's name, purchaser's name, address and contract number, item number and type, size and length of cable and net gross weight stencilled on both the sides of the drum. A tag containing same information shall be attached to the leading end of the cable. An arrow and suitable accompanying wording shall be marked on one end of the reel indicating the direction in which it should be rolled.

(c.) The standard drum length for control cables shall not be less than 1000 metres. The length per drum shall be subjected to a maximum tolerance of +/- 5% of the standard drum length. The Employer shall have the option of rejecting cable drums with shorter lengths. For each size, the variance of total quantity, adding all the supplied drum lengths, from the ordered quantity, shall not exceed +/- 2%.

4.00.00 TESTS

4.01.00 **GENERAL**

All equipments to be supplied shall be of type tested design. During detailed engineering, the contractor shall submit for Owner's approval the reports of all the type tests as listed in this specification and carried out within last ten years from the date of bid opening. These reports should be for the test conducted on the equipment similar to those proposed to be supplied under this contract and the test(s) should have been either conducted at an independent laboratory or should have been witnessed by a client.

However if the contractor is not able to submit report of the type test(s) conducted within last ten years from the date of bid opening, or in the case of type test report(s) are not found to be meeting the specification requirements, the contractor shall conduct all such tests under this contract at no additional cost to the owner either at third party lab or in presence of client /owners representative and submit the reports for approval.

All acceptance and routine tests as per the specification and relevant standards shall be carried out. Charges for these shall be deemed to be included in the equipment price.

The type test reports once approved for any projects shall be treated as reference. For subsequent projects of NTPC, an endorsement sheet will be furnished by the manufacturer confirming similarity and "No design Change". Minor changes if any shall be highlighted on the endorsement sheet.

4.02.00 **TYPE TESTS:**

4.02.01 The Type tests reports for the following shall be submitted for one size of LT control cable :

S. No.	Type Test	Remarks
a)	**For Conductor**	
1.	Resistance test	
b)	**For Armour Wires / Formed wires**	
2.	Measurement of Dimensions	
3.	Tensile Test	
4.	Elongation test	
5.	Torsion test	For round wire only
6.	Winding test	For Formed wires
7.	Resistance test	
8.	Zinc Coating test	For G.S. conductors only.
c)	**For PVC insulation & PVC Sheath**	
9.	Test for thickness	
10.	Tensile strength and elongation test before ageing and after ageing	
11.	Ageing in air oven	
12.	Loss of mass test	For PVC insulation and sheath only
13.	Hot deformation test	For PVC insulation and sheath only

14. Heat shock test — For PVC insulation and sheath only

15. Shrinkage test

16. Thermal stability test — For PVC insulation and sheath only

17. Oxygen index test — For outer sheath only

18. Smoke density test — For outer sheath only

19. Acid gas generation test — For outer sheath only

d) **For completed cables**

20. Insulation resistance test (Volume resistivity method)

21. High voltage test

23. Flammability test as per IEC - 332 Part-3 (Category-B)

4.02.02 **Acceptance Tests** (as per QA table)

4.03.00 **Routine Tests** (as per QA table)

CABLING, EARTHING & LIGHTNING PROTECTION

1.00.00 CODES AND STANDARDS

IS:2309, IEEE:142, IEEE-80, IS:1255, IS:3043, IS:8309

2.00.00 REQUIREMENTS

2.01.00 The complete cable support system shall be supplied and installed for the entire work is in the bidder's scope. The system shall enable proper laying of all power, control, instrumentation and telephone cables, and shall provide necessary mechanical protection, ventilation and segregation for them as per latest engineering practices and cable manufacturers' recommendation .The cable installation shall be carried out as per IS:1255. All hardware and anchoring arrangement shall be included. All steel members shall be hot dip galvanised

Annexure-VI

VENDOR HAS TO SUBMIT ONLY FOLLOWING DOCUMENTS ALONG WITH THE OFFER, FOR TECHNICAL EVALUATION OF THE BID:-

1.0 **NO DEVIATION CERTIFICATE' – Clearly mentioning that bidder has considered 'No - Deviation' from the technical specification provided by BHEL.**

OR

DEVIATION Sheet, indicating clause wise technical deviation if any.

2.0 Unpriced format, duly mentioned 'Quoted' against each Sl.no. below each column.

3.0 Duly signed and stamped Compliance cum Confirmation form.

Note1:- Any other standard document/ details furnished by the bidder i.e. Data sheet / Crane clearance diagram/ GA Drawing/ QAP etc. shall not be taken in to consideration for evaluation.

Note 2:- Bidder to note that if the bidder does not submit the documents mentioned in Sl. No. 1.0 ,2.0, and 3.0 along with their offer then their offer is liable to be rejected.

COMPLIANCE CUM CONFIRMATION CERTIFICATE

The bidder shall confirm compliance with following by signing/ stamping this compliance certificate (every sheet) and furnish same with the offer.

a) The scope of supply, technical details, construction features, design parameters etc. shall be as per technical specification & there are no exclusions other than those mentioned under "exclusion" in section C and those resolved as per 'Schedule of Deviations', if applicable, with regard to same.

b) There are no other deviations w.r.t. specifications other than those furnished in the 'Schedule of Deviations'. Any other deviation, stated or implied, taken elsewhere in the offer stands withdrawn unless specifically brought out in the 'Schedule of Deviations'.

c) Bidder shall submit QP in the event of order based on the guidelines given in the specification & QP enclosed therein. QP will be subject to BHEL/ CUSTOMER approval & customer hold points for inspection/ testing shall be marked in the QP at the contract stage. Inspection/ testing shall be witnessed as per same apart from review of various test certificates/ Inspection records etc. This shall be within the contracted price with no extra implications to BHEL after award of the contract.

d) All drawings/ data-sheets/ calculations etc. submitted along with the offer shall be considered for reference only, same shall be subject to BHEL/ CUSTOMER approval in the event of order.

e) The offered materials shall be either equivalent or superior to those specified in the specification & shall meet the specified/ intended duty requirements. In case the material specified in the specifications is not compatible for intended duty requirements then same shall be resolved by the bidder with BHEL during the pre - bid discussions, otherwise BHEL/ Customer's decision shall be binding on the bidder whenever the deficiency is pointed out.

   For components where materials are not specified, same shall be suitable for intended duty, all materials shall be subject to approval in the event of order.

f) The commissioning spares shall be supplied on 'As Required Basis' & prices for same included in the base price itself.

g) All sub vendors shall be subject to BHEL/ CUSTOMER approval in the event of order.

h) The EQUIPMENT'S functional guarantees shall stand valid till at least eighteen (18) months from PERFORMANCE GUARANTEE test of equipment as per technical specification or commercial terms and conditions, whichever is later.

i) In the event of order, all the material required for completing the job at site shall be supplied by the bidder within the ordered price even if the same are additional to approved billing break up, approved drawing or approved Bill of quantities. This clause will apply in case during site commissioning additional requirements emerges due to customer and/ or consultant's comments. No extra claims shall be put on this account.

j) Schedule of drawings submissions, comment incorporations & approval shall be as stipulated in the specifications. The successful bidder shall depute his design personnel to BHEL's/ Customer's/ Consultant's office for across the table resolution of issues and to get documents approved in the stipulated time.

k) As built drawings shall be submitted as and when required during the project execution.

l) The bidder has not tempered with this compliance cum confirmation certificate and if at any stage any tempering in the signed copy of this document is noticed then same shall be treated as breach of contract and suitable actions shall be taken against the bidder.

m) Regarding commercial documents / deviations, BHEL clarified that commercial documents / deviations shall not been considered during technical evaluation. However if any issue in the commercial documents / deviation related to technical requirements needs to be highlighted and resolve in technical evaluation only.
No aspect of commercial issues needs to be highlighted / resolved in technical evaluation and their offer is strictly in compliance with technical specification. BHEL also clarified to the bidder any technical deviations (e.g. related to MDL, required documentation etc. for completion of the project) raised by them in commercial deviation either explicit or implicit shall be considered null and void even if agreed by BHEL during commercial evaluation stage.
Bidder agreed to confirm and compliance with technical specification and subsequent clarification on bids during pre- award discussion.